WEAPONS SYSTEM INTRODUCTION NEED NOT BE A CHARADE

Robert Francis Hurley

DUDLEY KNOX LIBRARY
NAVAL POSTGRADUATE SCHOOL
MONTEREY, CALIFORNIA 93940

NAVAL POSTGRADUATE SCHOOL
Monterey, California

THESIS

WEAPONS SYSTEM INTRODUCTION
NEED NOT BE A CHARADE

by

Robert Francis Hurley, Jr.
and
David Arthur Newcomb

September 1974

Co-Advisors: S.M. Dean and W.C. Giauque

Approved for public release; distribution unlimited.

T164068

SECURITY CLASSIFICATION OF THIS PAGE (When Data Entered)

REPORT DOCUMENTATION PAGE

READ INSTRUCTIONS BEFORE COMPLETING FORM

1. REPORT NUMBER

2. GOVT ACCESSION NO.

3. RECIPIENT'S CATALOG NUMBER

4. TITLE (and Subtitle)

WEAPONS SYSTEM INTRODUCTION NEED NOT BE A CHARADE

5. TYPE OF REPORT & PERIOD COVERED

Master's Thesis; September 1974

6. PERFORMING ORG. REPORT NUMBER

7. AUTHOR(s)

Robert Francis Hurley, Jr. and
David Arthur Newcomb

8. CONTRACT OR GRANT NUMBER(s)

9. PERFORMING ORGANIZATION NAME AND ADDRESS

Naval Postgraduate School
Monterey, California 93940

10. PROGRAM ELEMENT, PROJECT, TASK AREA & WORK UNIT NUMBERS

11. CONTROLLING OFFICE NAME AND ADDRESS

Naval Postgraduate School
Monterey, California 93940

12. REPORT DATE

September 1974

13. NUMBER OF PAGES

285

14. MONITORING AGENCY NAME & ADDRESS(if different from Controlling Office)

Naval Postgraduate School
Monterey, California 93940

15. SECURITY CLASS. (of this report)

Unclassified

15a. DECLASSIFICATION/DOWNGRADING SCHEDULE

16. DISTRIBUTION STATEMENT (of this Report)

Approved for public release; distribution unlimited.

17. DISTRIBUTION STATEMENT (of the abstract entered in Block 20, if different from Report)

18. SUPPLEMENTARY NOTES

19. KEY WORDS (Continue on reverse side if necessary and identify by block number)

MK-48 Torpedo Weapons System; Fleet Introduction of a Weapons System; MK-48 Torpedo Case Studies; Systems Acquisition Management Case Studies; Case Studies

20. ABSTRACT (Continue on reverse side if necessary and identify by block number)

As the title implies, introduction of a weapons system is an evolution involving the interfacing of a set or several sets of players, led or persuaded by an individual, a group, or an organization, who/that may or may not properly consider the whos, hows, whens, and wheres of communicating their thoughts, ideas, or desires. By demonstrating behavior in

DD FORM 1 JAN 73 1473 (Page 1)

EDITION OF 1 NOV 65 IS OBSOLETE
S/N 0102-014-6601

SECURITY CLASSIFICATION OF THIS PAGE (When Data Entered)

Block 20 - ABSTRACT (Cont.)

the weapons system introduction arena through the presentation of six in depth case studies, the authors attempt to meaningfully expose students to the inexorably powerful, but often neglected, role that these fundamental communications/coordination considerations exert in the routine prosecution of project management. In the process, focus will be directed toward the dynamic inter and intra relationships existing between users and/or producers who participated in the Fleet Introduction of the MK-48 Torpedo Weapons System. It is the desire of the authors to not only provide some finite insight to specific problems, but to also impart to the student a strong personal identification with and appreciation for the real life pressures and exigencies that manifest in the atmosphere of severe time and money versus quality constraints.

Weapons System Introduction

Need Not Be a Charade

by

Robert Francis Hurley, Jr.
Lieutenant Commander, United States Navy
B.S., Naval Postgraduate School, 1973

and

David Arthur Newcomb
Commander, United States Navy
B.S., United States Naval Academy, 1958

Submitted in partial fulfillment of the
requirements for the degree of

MASTER OF SCIENCE IN MANAGEMENT

from the

NAVAL POSTGRADUATE SCHOOL
September 1974

Thesis
H95714
c.1

DUDLEY KNOX LIBRARY
NAVAL POSTGRADUATE SCHOOL
MONTEREY, CALIFORNIA

ABSTRACT

As the title implies, introduction of a weapons system is an evolution involving the interfacing of a set or several sets of players, led or persuaded by an individual, a group, or an organization, who/that may or may not properly consider the whos, hows, whens, and wheres of communicating their thoughts, ideas, or desires. By demonstrating behavior in the weapons system introduction arena through the presentation of six in depth case studies, the authors attempt to meaningfully expose students to the inexorably powerful, but often neglected, role that these fundamental communications/coordination considerations exert in the routine prosecution of project management. In the process, focus will be directed toward the dynamic inter and intra relationships existing between users and/or producers who participated in the Fleet Introduction of the MK-48 Torpedo Weapons System. It is the desire of the authors to not only provide some finite insight to specific problems, but to also impart to the student a strong personal identification with and appreciation for the real life pressures and exigencies that manifest in the atmosphere of severe time and money versus quality constraints.

TABLE OF CONTENTS

INTRODUCTION ---------- 9

MK-48 TORPEDO FLEET INTRODUCTION (A) ------ A-1 thru A-11

MK-48 TORPEDO FLEET INTRODUCTION (B) ------ B-1 thru B-27

MK-48 TORPEDO FLEET INTRODUCTION (C) ------ C-1 thru C-47

MK-48 TORPEDO FLEET INTRODUCTION (D) ------ D-1 thru D-27

MK-48 TORPEDO FLEET INTRODUCTION (E) ------ E-1 thru E-18

MK-48 TORPEDO FLEET INTRODUCTION (F) ------ F-1 thru F-27

CONCLUSION ---------- 54

EXHIBITS ---------- X-1 thru X-14

APPENDIX I LIST OF ACRONYMS ---------- I-1 thru I-7

APPENDIX II THE ORDALT PROGRAM --------- II-1 thru II-4

APPENDIX III THE SHIPALT PROGRAM -------- III-1 thru III-3

APPENDIX IV CHARTERS/RESPONSIBILITIES OF CONSUBLANT STAFF FUNCTIONAL CODES ----- IV-1 thru IV-19

APPENDIX V TYPICAL DUTIES OF, AND RESPONSIBILITIES NORMALLY ASSIGNED TO NAVY CHIEF PETTY OFFICERS ---------- V-1 thru V-4

APPENDIX VI SUBMARINE ONBOARD TORPEDO LOADING AND HANDLING EQUIPMENT -------- VI-1 thru VI-8

APPENDIX VII PMO, CONTRACTORS' AND GOVERNMENT AGENCIES' RELATIONSHIPS ---- VII-1 thru VII-2

APPENDIX VIII REFERENCE MATERIAL --------- VIII-1

APPENDIX IX TEACHING NOTES ---------- IX-1

INITIAL DISTRIBUTION LIST ---------- 64

LIST OF EXHIBITS

1. Original Program Organization ---------- X-1
2. Department of Defense Organization Chart -------- X-2
3. Department of the Navy Organization Chart ------- X-3
4. Naval Material Command Organization Chart ------- X-4
5. Spring 1968 "Dual Effort" PMO Organization Chart- X-5
6. Summer 1971 "Post Competition" PMO Organization Chart ---------- X-6
7. MK-48 Program Coordination Group Membership ----- X-7
8. Force Weapons Office Relationship within COMSUBLANT Staff Organization ---------- X-8
9. Force Weapons Office Layout ---------- X-9
10. Organizational Relationship Between COMSUBLANT Staff and Other MK-48 Involved Commands --------- X-10
11. MK-48 Involved Portion of NUSC, Newport Organization ---------- X-11
12. Organizational Relationships Between COMSUBLANT and the PMO Staff ---------- X-12
13. SUBLANT Organization ---------- X-13
14. Typical Submarine Torpedo Room ---------- X-14

LIST OF DRAWINGS AND PHOTOGRAPHS

1. MK-48 TORPEDO FRONT 3/4 VIEW ---------- 12
2. MK-48 TORPEDO REAR 3/4 VIEW ---------- 13
3. MK-48 TORPEDO BEING HOISTED INTO LOADING POSITION- VI-2
4. MK-48 TORPEDO BEING LOADED INTO SUBMARINE -------- VI-3
5. (SSN 637 CLASS) TORPEDO STRIKEDOWN AND LOADING ARRANGEMENT ---------- VI-4
6. DECK SKID TOPSIDE ON MAIN DECK ---------- VI-5
7. DETAIL TOPSIDE DECK SKID AND RIGGING ---------- VI-5
8. MK 48 MOD 1 NOSE-FIRST INCLINED SHIPPING 30" HATCH APPLICABILITY SSN 637 AND 671 CLASS ---------- VI-6
9. MK 48-1 TORPEDO POSITIONED ON TOPSIDE DECK SKID -- VI-7
10. POWER TUBE LOADING EQUIPMENT ---------- VI-7
11. MK 48 MOD 1 HAND TUBE LOADING EQUIPMENT ---------- VI-8

ACKNOWLEDGEMENT

The authors wish to acknowledge the assistance provided by NAVORDSYSCOM, NAVSHIPS, NAVSEC, NOSSOLANT, NUSC, Newport, COMSUBLANT,[1] and several individuals who contributed to this effort.

In particular, the authors wish to express their heart-felt gratitude to those individuals who subjected themselves to a staccato barrage of questions in the presence of a tape recorder. Without these contributions and the willingness of the COMSUBLANT and Project Manager's staffs to provide access to their archives, this effort would not have been possible.

A final note of appreciation must be directed toward the Project Manager's Office acknowledging their timely review of the manuscripts and submission of editorial comments which are incorporated in the teaching notes.

---

[1] For clarification of the acronyms, please refer to Appendix I

INTRODUCTION

Philosophically, it is indeed satisfying to know that man's ability to communicate with his fellow man makes virtually none of his problems unassailable. This unique human capability is exercised almost continuously from the time one wakes until the time one retires, with little or no conscious appreciation for the unlimited horizons that it opens up for us. The problems we solve by exercising this ability throughout the course of a single day really comprise a mixed bag: finding ones pin-striped shirt, passively weighing the advice of the traffic helo in selecting the optimal route to work, dealing with the varied exigencies of the day, choosing the best course of action in ones investment program, planning a recreational venture, dealing with the problems of the household, and romantically negotiating the mutual satisfaction of sexual desires.

In and of themselves, none of these problems is monumental in nature. However, each requires special care in dealing with when we elect to use communications as a means to solve it. Once that decision is made, we must not only decide who to communicate with, but also how, when, and often where to communicate.

In dealing with the "who" question it is necessary to appreciate that man need not be constrained by his own education, ingenuity, past experience, or area of expertise. His ability to communicate permits him to take advantage of

these traits in others and use them selectively to solve a problem. Often he may find it necessary to coordinate these efforts and bring them together to bear on a problem.

The "how" question deals not only with the medium to be used, but the manner in which the communication is carried off. The range here runs from romantic in nature to adversary in nature, and there is a use for all natures in the spectrum.

The "when" question deals with the timing of the communication. Plagiarizing Ecclesiastes (Chapter 3, Verses 1 through 8), "There is a time and place for everything," communications included. Simply put, one has only to review the mixed bag of problems to develop an intuitive feel for the importance of communications timing.

The "where" question deals with geographic appropriateness, "your turf or mine," and the type of atmosphere most likely to enhance the communication effort. The comments addressed to the "when" question also apply.

From all this follows the suggestion that the more complicated a problem be, the more carefully we must deal with the whos, the hows, the whens, and the wheres of communications. Also, as the number of communicators involved in a problem increases, so too must the effort involved in dealing with these questions.

As the title seeks to imply, introduction of a weapons system is an evolution involving the interfacing of a set or several sets of players, led or persuaded by an individual,

a group, or an organization, who/that may or may not properly consider the whos, hows, whens, and wheres of communicating their thoughts, ideas, or desires.

Accordingly, it is our intent to meaningfully expose students to the inexorably powerful, but often neglected, role that these fundamental communication/coordination considerations exert in the routine prosecution of project management. To do this we will focus on the dynamic inter and intra relationships existing between users and/or producers who participated in the Fleet Introduction of the MK-48 Torpedo Weapons System (TWS).[1] We desire to not only provide some finite insight to specific problems, but to also impart to the student a strong personal identification with and appreciation for the real life pressures and exigencies that manifest in the atmosphere of severe time and money versus quality constraints.

Six case studies have been compiled to forcefully illustrate the essentiality of meaningfully conceived communications/coordination in planning and executing fleet introduction of a weapons system. Each case has been thoroughly researched, and a considerable effort has been made to resurrect the vital details surrounding events which actually occurred during Fleet Introduction of the MK-48 TWS. The factual content of each case has been reviewed by the Project Manager's Office (PMO).

---

[1] For clarification of the acronyms used through this thesis, please refer to Appendix I.

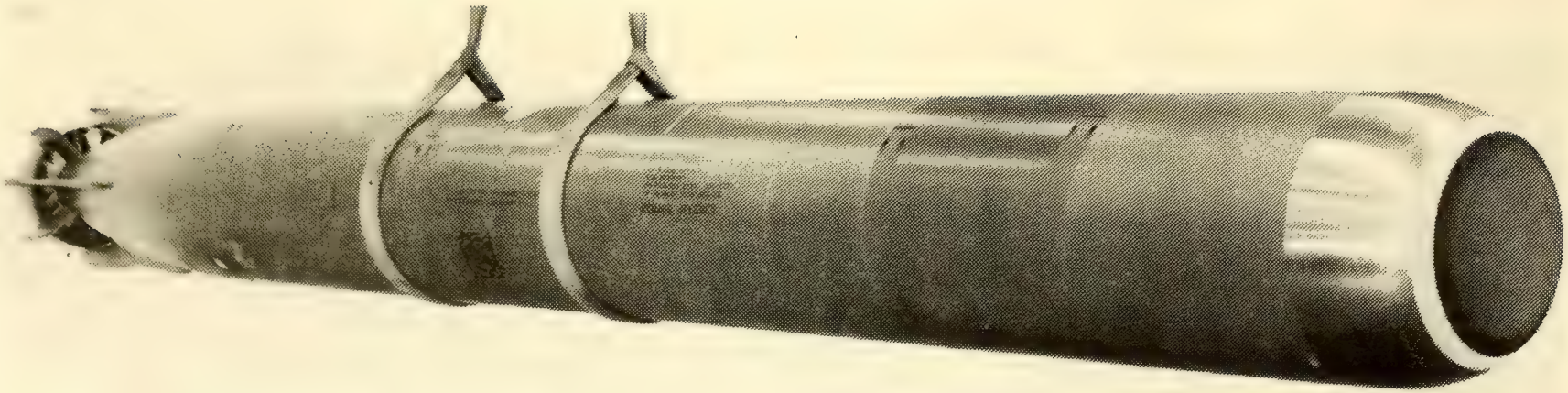

MK-48 TORPEDO FRONT 3/4 VIEW

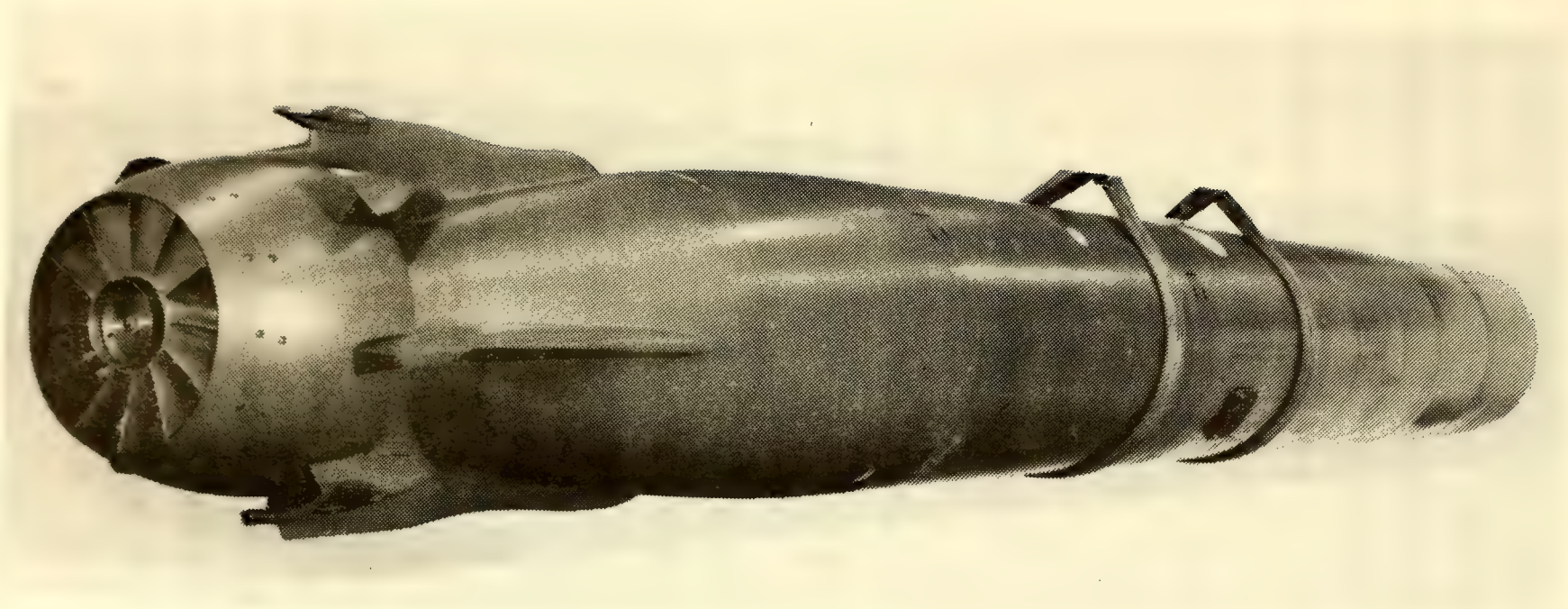

MK-48 TORPEDO REAR 3/4 VIEW

In order to "set the stage", provide perspective/orientation for dealing with specific cases, and instill an appreciation for the scope of program involvement, a brief chronological history of the MK-48 TWS program follows.

Ever since termination of World War II, there have been visionaries within the U.S. Navy who have recognized the need for and pressed for development of a more versatile torpedo than was available in the 1940's. In their estimate, the steam and electric driven, straight-running torpedoes of the war years offered little offensive capability against a submerged submarine. Despite the fact that this view was shared by several people in the Navy, little effort was directed toward overcoming this deficiency during the early post war years. However, the minimal effort applied resulted in the introduction of the MK-27 acoustic homing torpedo, a weapon designed from the ground up to attack submerged submarines. Although it was not a very effective torpedo, principally due to the novelty of concepts employed, it represented the first attempt to design a self guided anti-submarine weapon. The lessons learned with the MK-27 torpedo elicited the introduction of a more sophisticated MK-37 acoustic torpedo in the early 1950's. The MK-37 torpedo proved relatively effective against snorkeling submarines, primarily due to the ability of the torpedo to home-in on the noise of the diesel engines. Additionally, if the

firing ship was able to develop a fire control solution[2] accurate enough to ensure the MK-37 torpedo gets close enough to the target, it also proved itself fairly effective against quiet submarines running submerged on the battery. Use of the MK-37 torpedo against surface ships was severely constrained by its slow speed and small warhead. Most surface ships could outrun the MK-37 torpedo, and its warhead was simply too small to do much damage, let alone sink a surface ship of any size.

During the process of refining the MK-37 torpedo in the mid 1950's, the nuclear submarine became a reality. It was a true submersible and its performance capability, in terms of depth, speed, and maneuverability, proved an order of magnitude beyond that of the conventional submarine. Although considerable effort was directed toward improving the MK-37 torpedo to permit it to deal effectively with the nuclear submarine, the need for a torpedo, designed from inception, to attack the extremely capable nuclear submarine became quite obvious to all concerned. In addition to the

---

[2] Fire control solution -- Submarines are equipped with fire control equipment which received target data inputs from both the ship's sensors (i.e. sonar, periscopes, and radar) and manually. Manual inputs are based upon intelligence, manual calculations, and the desired torpedo performance profile. The fire control equipment processes this information and outputs a solution called the fire control solution; namely target position (range, bearing, and depth, if target is a Submarine), target course, and target speed. This solution is displayed to the operator of the equipment and it generates and transmits to the torpedo the commands necessary to guide it to the target. Surface ships are equipped with similar equipment.

nuclear submarine threat and the efforts to counter it, it became quite apparent that torpedo inventories were insufficient to cope with foreseen scenarios. These two factors provided the first real impetus to develop an anti-submarine torpedo capable of killing all breeds of submarines.

In May 1962, the Navy solicited proposals for development of the EX-10 torpedo in the Commerce Business Daily, officially setting into motion the effort which would eventually become known as the MK-48 TWS program. Initially, management of the EX-10 torpedo development effort was exercised by a Bureau of Weapons (BUWEPS) Division Director; the first full time staff member was assigned in June 1962. Contractor proposals were screened during the summer of 1962, and by September 1962 torpedo development competition had been reduced to five companies. During that same month, an official EX-10 Project Office was established to work with existing BUWEPS functional groups (i.e. Torpedo Division and Fire Control Division). Ordnance Research Laboratory at Pennsylvania State University (ORL/PSU) was designated the Navy's Torpedo Development Technical Director in October 1962, and in December 1962, the first "Program Manager", a Navy Lieutenant Commander, was designated. At this point the Program Manager (PM) had an office staff comprised of two people who worked with the aforementioned functional groups. This organization[3] remained until 1965 when the PM's staff

---

[3] See Exhibit 1 for original program organization.

was expanded to handle coordination of all functions in-house.

By February 1963, torpedo development competition was reduced to three companies, and development contract quotations were received from each. In May 1963, Office of the Secretary of Defense (OSD) requested that the EX-10 go through a modified system definition process,[4] as a prototype program. "Project Definition" contracts were negotiated with Westinghouse Electric Corporation (WECO) and the CLEVITE Corporation (CLEVITE). As a result of a 1969 merger, CLEVITE became the Oceans Systems Division of Gould Incorporated. Costs and technical proposals were received in October 1963, and requotations were requested from both companies in January 1964. In May 1964, WECO was approved as the successful contractor. In June 1964, contracts were negotiated with WECO for development of the MK-48 MOD-0 torpedo, and a sole-source contract was negotiated with Singer-Librascope Company for development of the fire control system modifications necessary to support the new torpedo. At this point the

---

[4] Modified system definition process -- the initial attempt of the McNamara OSD to employ "Contract Definition." "Contract Definition" was a McNamara originated formal procedure which preceded full-scale development. During "Contract Definition", preliminary engineering and contract and management planning were accomplished in order to arrive at realistic design characteristics, cost estimates, schedule estimates, and definition of high risk areas, as well as definition of system interfaces and management responsibilities. The ultimate objective of "Contract Definition" was use of firm fixed price or fully structured fixed price incentive contracts.

EX-10 Project became the MK-48 Torpedo Weapons System Program. The conceptual studies undertaken by the Navy prior to entering into the system definition and subsequent development contracts had received a wide range of very high level scrutiny. There were those in the Office of the Chief of Naval Operations (OPNAV) and the Department of Defense (DOD) who felt that the technical complexities being undertaken were of sufficient magnitude for the Navy to initiate back-up efforts in the areas of primary concern.[5] Formal proposals that such efforts be undertaken were initiated by both the Chief of Naval Operations (CNO) and DOD during the same month that the contract was signed with WECO. During the period July thru December 1964, the two man Project Office Staff (POS) made fifteen major presentations to gain support for various aspects of back-up programs. The kinetic effects and potential magnitude of the program began to pick up and intensify interest at all levels. In November 1964, the POS was increased to four persons, and a Navy Captain replaced the incumbent Navy Lieutenant Commander as PM. In December 1964, a back-up program was approved and contracts were signed with CLEVITE, General Dynamics (GD), General Electric (GE), and Honeywell. In June 1965, VITRO Laboratories (VITRO), Peat, Marwick, and Livingston (PML), and Operations Research Incorporated (ORI) were placed under

---

[5] See Exhibits 2, 3 and 4 for organization of DOD, Department of the Navy, and the Naval Material Command, respectively.

contract to assist the PM in his effort to meet the new CNO/DOD requirement that Fleet Introduction be accelerated. In December 1965, the POS was increased to 25 persons to handle the increased workload.

By August 1965, the MK-48 TWS Project Manager's Office (PMO) felt it necessary to caution WECO regarding its lagging development effort. These delays were brought about by a number of technical problems that took WECO by surprise and they were amplified by their refusal to carry on a meaningful dialogue with ORL/PSU, the Torpedo Technical Director. By March 1966, WECO had completed its first in-water run of the new MK-48 MOD-0 torpedo, and, in the Navy's opinion, with serious technical difficulties. By July 1966, disagreement regarding program technical status reached a crescendo, with the Project Office zeroing in on the unsatisfactory acoustic performance of the WECO torpedo. Advances were, however, being made in some project areas. An example of this was the Librascope MK-48-0 submarine fire control modification, which was completed and successfully installed in a Submarine, the USS JACK. Despite the advances, attention was still focused on the torpedo difficulties. In October 1966, for the first time, WECO admitted belief that there would be a "small" program schedule slip. In December 1966, the Navy called a top level meeting with WECO management and presented its findings. It was agreed that the development effort was at least six to eight months behind.

At this juncture it is appropriate to provide some additional background information to clearly illuminate the key forces which, in the opinion of CNO and the PMO, appear to have generated the expressed problems. First, the complexity of the envisioned weapons system was not correctly assessed by WECO, and it had not been fully appreciated at all key levels within the Navy. The torpedo contract and the fire control contracts were executed as fixed price incentive (FPI) type contracts. As it turned out, the fire control contract was well within the capabilities of Singer-Librascope, but the torpedo development requirements were far beyond WECO's estimates. This problem was seriously compounded by the fact that WECO's management attention to technical hiatuses proved insufficient. In the stated opinion of CNO, the Navy PM was placed in the awkward and tenuous position of being unable to manage the WECO contract as well as he might have been able to manage a cost plus (CP) type contract. As it was, he was able only to "view with alarm" the contractor's failure to meet set objectives. Unfortunately, the contractor was not the only difficult player. The records indicate that ORL/PSU, the Torpedo Technical Director, because of difficulty in eliciting required information from the contractor, failed to push sufficiently to uncover potential technical difficulties, ostensibly under their purview, in a timely fashion. The latter failure further extended the time required for the PM to gather sufficient evidence to take the contractor to task. However, the

PM's dogged pursuit of convincing evidence reached a climactic point in February 1967 when both WECO and ORL/PSU internal management suffered severe shake ups. Both reorganized and restaffed their efforts in the MK-48 TWS area. By April 1967, ORL/PSU efforts to rout out problems began to produce results, and detailed electronics problems were finally being identified. During the same month, a warhead/exploder back-up program was initiated.

As events progressed, it became necessary to enlist the assistance of a number of additional activities, commands, agencies, etc., separate from the primary contractor, to ensure successful prosecution of the program. This proliferation of involved agencies concurrently complicated total program management problems and increased expense. Many of these efforts, as it turned out, did produce data and technical support that were required by the primary contractor. Such additional efforts would, in the opinion of some, have far exceeded original contractor cost estimates, had WECO attempted to extend their development effort to pay for same under the existing FPI contract. WECO did (no doubt gladly) make selective use of the additional information.

Additional effort to develop the torpedo was now being provided by: Defense Research Laboratory, University of Texas (DRL) (simulation capability which monitored torpedo versus target reaction time -- This information was used primarily to debug the WECO acoustic homing system.), GD (Electric Boat Division) (evaluation of tests of torpedo

sonar systems in varying open-ocean environments), Honeywell Corp. (special underwater testing instrumentation and techniques which measured torpedo "close-in" homing performance in open-ocean, without expending torpedoes), GE (special studies and analysis of torpedo acoustic and homing system), Operations Research Inc. (ORI)(operation analysis of entire torpedo sequence from decision to fire to impact or reattack, reliability design analysis of system/component/element interfaces, and safety analysis of all torpedo internal systems), Naval Undersea Warfare Center, Pasadena (NUWC) (ocean/target/torpedo guidance interface simulation to study effects of parameters in sanitary versus countermeasure environments), ORL/PSU (designed research model of MK-48 homing system, interfaced data received from multiple studies and analyses to pin-point electronic deficiencies, and fed results to WECO to close gaps in problem areas and areas where no WECO evaluation efforts were being prosecuted), Naval Ordnance Station, Indian Head (NOS/IH) (studies/tests to improve MK-48 fuel consumption efficiency), Naval Ship Research and Development Center (NSRDC) (water tunnel proofing of torpedo hydrodynamic stability and control systems), General Motors (GM) (parallel torpedo exploder development to ensure adequate design in light of serious WECO exploder deficiencies), and CLEVITE (development of an alternate sonar acoustics package with a special "comb filter" countermeasure feature and development of a test vehicle to test same, in light of inability of WECO to make an operational MK-48 torpedo

available to CLEVITE). All of these efforts were in addition to those of the prime contractor, and all were directed solely toward torpedo development. It is important to recognize, however, that the torpedo, although in the star role, was but a single part in the overall scenario of the MK-48 TWS. Various major support sub-systems were also being developed. These efforts were kept, for the most part, inside the Navy house and were being accomplished through Systems Command Field Activities/Project Office Functional Tasks.

In June 1967, even as the first fire control production contract was awarded to Librascope, the torpedo continued to have acoustic, electronic, and reliability problems. These problems were once again clearly demonstrated in July 1967 when the first full in-water prototype acoustics test proved unsatisfactory. The new WECO management team had an extremely unenviable challenge, since they faced not only yet unsolved technical problems, but also a projected contractual ceiling over-run of $10 to $15 million. The prime contractor, needless to say, was not highly motivated to venture into the world of new torpedo designs. Rather, he was bent on making something acceptible out of existing design/hardware. Fully recognizing WECO's plight, the Navy continued to make available to WECO all of the information being derived from the myriad of back-up programs.

In September 1967, WECO conducted the first Production Prototype Torpedo (PPT) in-water run; this marked the end of Development Prototype Torpedo (DPT) fabrication. Meanwhile,

CLEVITE had, under the 1965 and 1966 contracts, succeeded in developing the back-up acoustic panel and test vehicle. These successes were facilitated by the close CLEVITE/Navy relationship afforded by the CPI contracts. Accordingly, it was to no ones surprise that CLEVITE's test vehicle looked much like what a MK-48 torpedo was supposed to look like.

By spring 1967, it appeared that the new test vehicle/torpedo design and engineering were in some aspects superior to the WECO MK-48-0 torpedo. In June 1967, CNO directed that efforts be redirected to consider expanding the CLEVITE test vehicle/sonar panel effort into a MK-48 MOD-1 torpedo, as a complete back-up for the WECO MK-48-0. The MK-48-1 torpedo was to utilize the same fire control and launching systems as the MK-48-0 torpedo.

The June 1967 CNO direction also addressed another key area. While the MK-48 TWS Program had been underway to produce a viable anti-submarine capability, other lower profile, minimally funded, and totally separate efforts had been underway within the Navy to produce a submarine launched, anti-surface ship torpedo. A new torpedo was needed to replace the WWII steam driven torpedoes which were getting old and waning in number, but represented the only existing anti-surface ship torpedoes in the submarine force inventories. Funds for the development of a new anti-surface ship torpedo were exhausted in January 1967, but considerable interest in upgrading the anti-surface ship capability of the submarine force prevailed within DOD and CNO. In March 1967, DOD

specifically asked CNO to develop the MK-48 torpedo as an anti-surface ship, as well as an anti-submarine weapon. Thus, the June 1967 CNO direction also required that the CLEVITE effort include integration of the anti-surface ship capability. The final impetus for CNO's decision had, in fact, been provided by CLEVITE. CLEVITE's new test vehicle was powered by an extremely efficient engine, thus reducing the fuel requirements necessary to equal MK-48-0 torpedo performance. The space savings due to the reduced on-board fuel stowage requirements made available sufficient room in the torpedo to install a larger warhead, specifically, one capable of sinking a major combatant surface ship. Accordingly, as a result of this development, CNO's June 1967 pronouncement concurrently directed that WECO's MK-48-0 torpedo also be considered as a candidate for dual capability.

In August 1967, Naval Ordnance Systems Command (NAVORD), formerly BUWEPS, outlined a program which provided for establishment of the CLEVITE effort as the MK-48-1, continuation of WECO's MK-48-0 effort, and the parallel WECO development of a dual purpose MK-48 MOD-2 torpedo. Funding in the MK-48-2 area was limited only to those characteristics unique to an anti-surface ship weapon.

Concurrent technical/operational evaluation officially began in September 1967, but, during the fall of 1967, WECO's MK-48-0 PPT in-water performance continued to be unsatisfactory. The acoustic system, torpedo transducer, warhead, and exploder specifications were among the major areas of noted

deficiency. ORL/PSU continued to turn up various electronic problems which the Navy considered, in many cases, to be basic and "attributable to inadequate implementation of functional electronic design."[6] By November 1967 the MK-48 Project Office recommended that the program be delayed nine months to correct technical difficulties. Since previous schedule slips had already consumed eight months, the program now faced a 17 month slip from the original program schedule. WECO clung to an opinion that there would be no more than a 2½ month slip, at the most. By December 1967, WECO and the Navy reached a stand-off: In addition to firm disagreement as to how much the schedule would have to slip to correct technical problems, there was also disagreement on the course of action necessary to correct identified deficiencies. The Navy recommended certain major component redesign, but the agreed plan for a solution, reached later in December, excluded any such major redesign as WECO continued to reject recommendations that such steps were required. With all this as a background, the MK-48 Project Office and ORL/PSU (WECO reluctantly agreed that they would cooperate, but that such action was unnecessary.) formed plans to slip the WECO program the additional nine months and to continue to fully prosecute parallel development. Fleet and Type Commanders were notified at this point of the approximate nine month slip in Technical/Operational Evaluation requirements.

---

[6] Quote from a 1967 CNO memo.

Based on data generated by reaction to his June 1967 direction, CNO acted again in December 1967 by providing the following guidelines to all concerned regarding the course of action the MK-48 TWS Program was to take:

A) "Vigorously prosecute MK-48-0 development."

B) "Expand CLEVITE effort to provide a MK-48-1 development."

C) "With reference to the MK-48 MOD-2, only that effort which is common with MOD-1 should be taken through FY-69. A decision should be reached prior to FY-70 as to which dual purpose version will enter engineering development."

Thus, in early 1968, new project organizational relationships were established to handle an increasing program. The project now had to be further expanded to include management of the CLEVITE MK-48-1 development. Outside agency support requirements were also further expanded. By Spring 1968, the MK-48 TWS Program Management structure consisted of two closely coordinated, but parallel torpedo development efforts within NAVORD. Management of the MK-48-0/2 WECO effort was under the direct cognizance of a MK-48-0/2 Project Officer (ORD 055), while management of the MK-48-1 effort was assigned to a separate Project Officer (ORD 054). Both ORD 055 and ORD 054 were Navy Captains.[7]

---

[7] See Exhibit 5 for new PMO organization.

ORD 055's responsibilities, in addition to those directly related to MK-48-0/2 development, included development of the MK-27 Mobile Torpedo Target (MTT), the modifications to existing Fleet fire control and launcher equipments (to adapt both to accommodate all versions of the MK-48 torpedo), and logistic support of the entire weapons system. His technical advisor for MK-48-0/2 remained ORL/PSU. Specific technical direction for MK-48-0/2 torpedo development and for Librascope fire control modifications was provided by Naval Underwater Systems Center, Newport, R.I. (NUSC). This arrangement satisfied two additional requirements: First, it took the pressure off of ORL/PSU and permitted them to devote greater attention to correcting the myriad of MK-48-0/2 technical problems; Second, it was the initial step down a prearranged path which provided for NUSC assuming ultimate responsibility for MK-48 TWS technical support, following development and Fleet Introduction. Another major technical development fell under the cognizance of ORD 055 and was assigned to Naval Ordnance Laboratory, White Oak, Md. (NOL/WO). NOL/WO's technical support function was similar to that of NUSC: NOL/WO's task was to focus on the technical development of the back-up exploder system which was under contract to GM.

ORD 054's responsibility focused on development of the CLEVITE MK-48-1 dual purpose torpedo (anti-submarine/anti-surface ship). The MK-48-1 effort concerned itself only with the torpedo, which was to be fully compatible with all MK-48-0/2 support systems (e.g. MK-27 MTT, fire control

modifications, launcher, etc.). ORD 054's outside technical development director for the MK-48-1 torpedo was NOL/WO. This was deemed logical since, in addition to technical development of the exploder system with GM, NOL/WO had been working as technical development director with CLEVITE in the development of the "comb filter" acoustic panel under the 1965 contract.

It can be readily seen that the ORD 055/ORD 054 organizations, ORL/PSU, NUSC, and NOL/WO had to coordinate closely, since there was considerable technical interface required and a good deal of common interest overlap. While ORD 055 was recognized as a sort of titular head of the combined effort, there should be no doubt that the MK-48-1 effort was now, in effect, proceeding in competition with the MK-48-0/2 effort, with the support systems considered common to both efforts.

The complexity of the program support organization and requisite management requirements became enormous as the program grew. In some cases single government activities were performing several roles within the program and, due to manpower and dollar ceilings, trade-offs were made to achieve desired goals. Work was allocated between contracts with commercial activities, and in-house tasks assigned by job order to government activities. The contractual and task assignment relationships within the project were extremely complex. In February 1968, there were 23 separate government activities with task assignments and 15 commercial contracts

underway in support of Project Office back-up efforts. These were in addition to the WECO, CLEVITE, Librascope, and GM prime contracts. Subcontractors are not even considered in these figures.

This then was the setting as the MK-48 TWS Program entered calendar year 1968. At this point, Fleet planning or development involvement had been minimal. Although both the Atlantic and Pacific Fleet Submarine Force Staffs (SUBLANT/SUBPAC) had been assigned one billet each for a MK-48 TWS Project Officer, to more effectively interface the Fleet with the Program Office, neither Force was playing a participative or routinely active role in the Program during the Spring of 1968. Although the Fleet was anxiously awaiting development of the MK-48 TWS, when Fleet input was solicited, the Fleet was quick to respond, but such solicitation was sporadic. The most significant Fleet participation had occurred in early 1966. A July 1965 letter from Manager, Anti-Submarine Warfare Systems Project Office, Washington, D.C. (MASWSPS) forwarded ORL/PSU's preliminary "Torpedo MK-48 Operational Handbook" for Fleet review. Both COMSUBLANT and COMSUBPAC submitted comprehensive recommendations resulting from forcewide study of the handbook. Many of these recommendations were ultimately incorporated into the design of the MK-48 TWS. This type of Fleet participation was not, however, sustained throughout Program evolution, and by 1968 the MK-48 TWS Program took a back seat to the daily operational exigencies with which the Submarine Force

was dealing. It should be noted however, that submarines were beginning to receive the MK-48-0 fire control system ordnance alterations that resulted from the June 1967 contract with Librascope. These alterations/modifications, or "ORDALTS",[8] as they are called, were being handled primarily in conjunction with routine shipyard overhauls, or during new construction. Since there were no MK-48 torpedoes in the Fleet, however, submarine personnel gave minimal attention to these new equipments, as primary Fleet emphasis was directed toward the handling, maintenance, and firing of those torpedoes which were, in fact, members of existing Fleet inventories.

As the Program moved into 1968, the MK-48-0 schedule was officially slipped nine months. WECO was still resisting incorporation of design changes recommended by the PM and ORL/PSU. The FPIF contract with WECO continued to hamper the Navy's efforts to actively engage and apply changes evolving from the parallel development effort, except through contract changes. In order to avoid uncontrolled escalation of cost and contractor imposed schedule delays, the Navy was forced to effect change through bi-lateral agreements with WECO. Paradoxically, this approach was, itself, quite time consuming, since reaching mutual agreement regarding schedules and new cost ceilings, in conjunction with each change, was an extremely difficult task at best. To further

---

[8] See Appendix II for explanation of ORDALT program.

complicate matters, the existing FPIF contractural arrangements consistently prevented review of the WECO internal plans and engineering designs before fabrication began. Hence, many defects withheld their debut until the torpedoes were actually fired on the range.

By the end of 1967, 46 bi-lateral contract changes had been negotiated, and the Navy had invested almost $30 million in outside back-up programs. Further, in spite of the additional funding which accompanied the many changes, the contractor had exceeded the originally projected cost ceilings by $10 to $15 million. Cost and schedule had to be traded off in order to meet minimum performance criteria.

The contractual difficulties being experienced with WECO did not go unheeded. In April 1968, the Navy awarded a Cost Plus Fixed Fee (CPFF) contract to CLEVITE to continue development of the MK-48-1 torpedo and to fabricate 20 DPT's, with dual purpose capability. This flagged the birth of the MK-48 MOD-1 Torpedo. Fabrication of the first MK-48-1 DPT began in June 1968. In this case the contract provided for maximum Navy/contractor "engagement". Accordingly, full advantage was taken of all existing program experience, and effective contractor technical direction was maintained by the PM through NOL/WO.

The period between June 1968 and July 1969 was characterized by intensive efforts in both the WECO and CLEVITE camps to perfect their respective torpedoes. WECO continued MK-48-0/2 torpedo in-water tests, and CLEVITE completed its

first official MK-48-1 torpedo in-water test in April 1969. By July 1971, WECO had completed over 1000 in-water tests of the MK-48-0/2 torpedo, and CLEVITE had completed over 700 in-water tests of the MK-48-1 torpedo, plus thousands of runs using actual torpedo homing and control hardware on a real-time, hybrid computer simulator at NUWC. Multiple environmental tests of completed torpedoes and components were also completed.

The final determination of which torpedo would be chosen for production and Fleet Introduction was to be a "shoot out" -- an intricate selection process was to be conducted that would permit parallel/side-by-side detailed evaluation. Among many other criteria, the aspects of torpedo cost, performance, supportability, reliability, maintainability, and availability played key evaluation roles. The climax of this highly competetive, side-by-side "shoot out" consisted of two major steps: A Navy Technical Evaluation, and a Navy Operational Evaluation. Overall responsibility for the administration and coordination of this at-sea competetive demonstration was, by CNO edict, assigned to Commander Operational Test and Evaluation Force (COMOPTEVFOR), in Norfolk, Virginia. He was to function as the unbiased "third party", as it were -- "the referee". The technical evaluation of each torpedo was placed under the direct supervision of the assigned technical director, NUSC for the MK-48-0/2 and NOL/WO for the MK-48-1. COMOPTEVFOR oversaw the entire technical evaluation and coordinated logistic support. COMOPTEVFOR

kept things on track and basically attempted to ensure that both technical directors got the support necessary to satisfy program test and evaluation criteria. The operational evaluation fell under the direct cognizance of COMOPTEVFOR.

The technical and operational evaluations focused on the final hardware configurations, testing not only the torpedoes, but also the documentation, training, and, in general, the total weapons system and its supportability. While many of the tests and evaluations could have been and were conducted in torpedo workshops, laboratories, and on simulators, the "acid test", the final Technical and Operational Evaluation, was conducted at sea. In many cases, the torpedoes under test and evaluation were fired from specially configured barges and surface craft, but the majority of firings were conducted from submarines. These firings were conducted at the Navy's three-dimensional tracking ranges in Tongue of the Ocean, Andros Island, Bahamas and in DABOB Bay, Keyport, Washington. The Naval Weapons Station, Keyport, Washington also functioned as a proofing station (conducted in-water and bench tests) for all new torpedoes before each torpedo entered into the evaluation program.

To provide for conduct of this effort, the CNO, in 1968, required the Submarine Force to designate three "dedicated" submarines to support the MK-48 TWS Technical/Operational Evaluations. These submarines were equipped with hardware modifications which permitted them to load, carry, support, and fire MK-48 torpedoes. The first three submarines so

designated were the USS JACK, the USS PARGO (both nuclear), and the USS TRIGGER (a diesel submarine). "Dedicated" submarines gave MK-48 TWS operations first priority and remained an integral part of the MK-48 TWS Program on an essentially permanent, on-call basis. As "dedicated" submarines came due for mandatory overhauls, they were replaced by other submarines. While conducting MK-48 torpedo operations, "dedicated" submarines fell under the direct operational control of COMOPTEVFOR for all related matters. And, as a result of the way operational directives were worded, all MK-48 TWS Program reports generated by the "dedicated" submarines were filed to or via COMOPTEVFOR rather than the Submarine Force Commander. The results of MK-48 torpedo firings and performance were closely guarded to preserve the confidentiality of the selection process. The torpedo contractors were not allowed to participate in the at-sea Technical/Operational Evaluation firings. Submarine personnel were enjoined to offer no comments, official or otherwise, regarding torpedo performance, except as solicited and controlled by COMOPTEVFOR. Hence, by design, "dedicated" submarines of the Fleet were program vehicles, but the Fleet was isolated from direct input or participation in the evaluation process. The valuable experience gained by participating submarines was not lost, however. This information eventually played a vital role in Fleet Introduction, but the communications restraints which existed until MK-48-1 torpedo selection in July 1971 unquestionably hampered the Fleet's ability to enter into a full user/producer dialogue.

During calendar year 1969, the USS PARGO officially entered the arena as the first MK-48 TWS configured submarine, with a fire control system capable of firing either the MK-48-1 or MK-48-0/2 torpedoes. The steps necessary to reach this program milestone unveiled to many interested onlookers, for the first time, the fact that fire control modifications made specifically to support the MK-48-0 torpedo were incapable of providing compatability for both the MK-48-1/2 and the MK-48-0 torpedoes. Mutual compatability was achieved in the "dedicated" submarines solely due to the availability of two fire control systems per submarine: one was modified to support the MK-48-1/2 while the other was modified to support the MK-48-0. What this episode also showed was the fact that a great deal more attention would have to be directed to the fire control area following torpedo selection, and the attention required would be a function of the torpedo selected. PARGO became the key participant in the early evaluation process and fired both WECO and CLEVITE torpedoes during the Spring and Fall of 1969 at the Navy's Tongue of the Ocean 3-D Range. While the 1969 evaluation process unveiled many hardware problems, it also marked the beginning of tangible corrective engineering. 1969 also brought the dynamics, the reality, and the true dimensions of the competetive effort into sharper focus for all participants.

The next major milestone occurred in Jaunary 1970 when the first CLEVITE PPT underwent in-water testing. Early 1970

was a period fully dedicated to in-water testing and continued torpedo hardware improvement. The formal side-by-side technical evaluation, "shoot out", began in August 1970, at which time both torpedoes had overcome virtually all serious technical difficulties. Both torpedoes had been subjected to a wide range of tactical scenarios under actual operating conditions, and both torpedoes had performed well. There were still problems, to be sure, but, all in all, both torpedoes'capabilities in various ocean environments and against differing targets and target geometries had been demonstrated. There was now little doubt regarding the capability of either torpedo to successfully attack and destroy nuclear submarines or surface ships.

During 1969, the MK-48 TWS Project Office had been reorganized. ORD 055 and ORD 054 were brought together under one MK-48 TWS Manager, (PMO-402). The new manager was a senior Navy Captain, subsequently promoted to the rank of Rear Admiral. ORD 055 and ORD 054 became PMO 4021 and PMO 4022 respectively. At this point the PMO had grown in number to 47 officers and civilians. The PMO was a matrix type organization, with a number of the staff members "wearing two hats", since they were concurrently assigned to functional positions in other organizations within the Navy [e.g. Naval Ships System Command (NAVSHIPS), Naval Ship Engineering Center (NAVSEC), NAVORD, etc.]. Recall that the MK-48 TWS PMO was also responsible for the development of all of the subsystems necessary to launch and support the MK-48

torpedoes. Accordingly, the PMO organizational structure went through several reorganizations to accommodate various phases and changes in hardware emphasis, as the program evolved.

During the 1970 timeframe, the PMO was organized under PMO 402 into four separate divisions: One division for each torpedo, a Test and Evaluation division, and a Plans and Programs division. This organization seemed satisfactorily structured to deal with the functional commands, the agencies tasked to perform various support and back-up development requirements, and the Naval chain of command.

In October 1970, with the side-by-side technical portion of the Navy Technical/Operational Evaluation well underway, the Navy negotiated contracts with both WECO and CLEVITE for each to produce approximately 50 of their respective production torpedoes. Either WECO's 50 torpedoes or CLEVITE's 50 torpedoes would represent the first production lot, dependent upon which torpedo was eventually selected.

The technical evaluation bogged down somewhat during November/December 1970 because of a drop in torpedo on-range hardware performance reliability. This caused a schedule delay. The deficient on-range performance was eventually traced to software and people problems, particularly in the area of torpedo preparation. These problems were uncovered at the Capt Kennedy, Florida torpedo workshop, where all of the torpedoes were prepared for firing at the Navy's Tongue of the Ocean 3-D Range. These problems were corrected

following review and approval of revised shop procedures. The evaluation effort resumed its normal pace in January 1971. Shortly thereafter, Technical Evaluation was completed, and Operational Evaluation began. The side-by-side Operational Evaluation was concluded in June 1971, bringing to a close what had become known as the Selection Test Procedure (STP).

Following the detailed review of each torpedo's in-water performance a myriad of data surrounding engineering, reliability, suportability, etc., the DOD Defense System Acquisition Review Council (DSARC) declared CELVITE's MK-48 MOD-1 torpedo the winner. Selection of the MK-48-1 signaled a new and major shift in the scope of project management effort. The WECO MK-48-0/2 was "out", and attention immediately shifted to MK-48-1, which continued Operation Evaluation in order to more fully satisfy data and testing criteria in certain technical areas. There was also strong impetus to interface the ancilliary support systems and areas. The program goal was now "Fleet Introduction" of the MK-48 TWS.

The Project Office was again reorganized to better manage the new requirements. Now the PM, PMO 402, functioned as a kind of directorate, comprised of the PM, a Deputy PM (a Navy Captain), a Technical Director (a Navy Captain), an Assistant for MK-48-0/2 Phase-Out (a Navy Captain, formerly PMO 4021), and a secretary. The PMO was reorganized into five divisions under the directorate: Engineering, Production, Plans and Resources, Test and Evaluation, and Fleet

Support. The Engineering division was the largest, with about 18 members. The other divisions had from six to nine members. Each division was headed by a Navy Captain or Commander. At this point there were over 50 persons assigned to the PMO.[9]

As noted earlier, the Fleet had provided ship services, but there had been no formal or consistent user/producer dialogue between the Fleet Commanders and the Project Office as an integral part of the master planning and development process. This is not to say that there was no liason; there was. However, the interface was oriented toward solving problems or exchanging information on a relatively unstructured "case basis". In addition to the ship services provided by both the Destroyer Force[10] and the Submarine Force, the Submarine Force did have some formal and informal communications structure for exchanging information.

Early in the MK-48 development program, the CNO had sought to provide a means to include the Fleet in the program dialogue; this had been done through the establishment of a forum called the "MK-48 Program Coordination Group" (PCG). This group was chaired by CNO (OP-951E), Head, Sub-Surface Branch, Technical Appraisal and Requirements Division

---

[9] See Exhibit 6 for revised PMO organization.

[10] Although the MK-48 TWS was designed for launch from surface ships as well as submarines, the Surface Navy had, to this point, shown relatively little interest in the program, beyond providing the required Test and Evaluation ship services.

of Anti-Submarine Warfare Programs,[11] and membership included a wide range of organizations and commands directly and indirectly involved in MK-48 TWS development.[12] The Fleet (e.g. Cruiser-Destroyer Force and Submarine Force) were PCG members and sent representatives to the meetings. These meetings were, in effect, "update" sessions for all concerned, and they also afforded an opportunity for interested parties to air their various complaints and/or recommendations regarding system development. Problems that were identified which required some kind of follow-up action were assigned as tasks to the appropriate and cognizant command. That command then reported on corrective action taken at the next group meeting. In general, group participants felt that the PCG was too large, it devolved into a "bitch" session too frequently, it did not offer any truely constructive benefit to program progress or improvement, and it simply added to the PM's harassment. There were also two sub-groups assigned to the PCG: The Torpedo MK-48 Weapons System Safety Review Sub-Group and the Torpedo MK-48 Weapons System Fire Control Sub-Group. The former was initially chaired by CNO, but, pursuant to reorganization within OPNAV, chairmanship was assigned to the Naval Safety Center, Norfolk, Virginia. The latter was chaired by Commander Submarine Development Group

---

[11] PCG Chairmanship was later transferred to CNO (OP-713), Head, Submarine Warfare Branch, Undersea and Strategic Warfare Division.

[12] See Exhibit 7 for complete list of PCG member organizations.

Two, New London, Connecticut (COMSUBDEVGRU TWO). COMSUBLANT and COMSUBPAC were represented on both of these sub-groups. The safety sub-group's task was to examine the torpedo, as well as the supporting ancilliary systems, with regard to material and personnel safety. Deficiencies noted were to be reported to CNO for further assignment of corrective action by CNO to the PM. The fire control sub-group's function was to develop torpedo firing doctrine for Fleet use. Both of these groups were active to varying degrees throughout the development effort. The successful effort of COMSUBDEVGRU TWO to gather data pertinent to the development of a submarine torpedo firing doctrine was particularly significant. The Project Office made a considerable degree of otherwise restricted information available to COMSUBDEVGRU TWO. Hence, a firing doctrine, which was suitable for use during the STP, was developed in parallel with the torpedoes. In this instance, user/producer dialogue appeared to be excellent.

CNO also took another step to bring the Fleet into the picture. He authorized both COMSUBLANT and COMSUBPAC a special MK-48 Project Officer billet, as mentioned earlier. The intent here was to provide both Submarine Force Commanders an officer specifically assigned to affect liaison with the MK-48 PMO and to assist in the Fleet Introduction process. Unfortunately, the job descriptions accompanying these billets were somewhat general in nature, and the billets were not formally linked to the Project Office in a definitized manner. Hence, the PMO paid little or no attention to the

existence of such Fleet billets for points of contact, and the Submarine Force Staffs initially found other, more pressing staff work for the officers assigned to these billets.

During the 1968 to July 1971 time frame, as the torpedo development showed tangible progress, there was unilateral effort on the part of the Submarine Force Commanders to use the officer assigned to the MK-48 billets to affect liaison in MK-48 TWS matters. This effort continued to gain intra-staff support as the MK-48 TWS Program successes mounted and as submarines were "dedicated" to provide MK-48 Technical/Operational Evaluation services. As a result, a considerable amount of ground work for Fleet Introduction was ultimately laid through informal liaison between the Submarine Force MK-48 Project Officers, key members of the PMO Staff, various Systems Command functional offices, field activities tasked to support Fleet Introduction, and the Submarine Force's operational staffs and units.

As of the Summer of 1971, the major problem was hardware and Fleet interface. This was complicated, in part, by the fact that although the CLEVITE torpedo was selected, the support systems, from inception, were designed to support the WECO torpedo. Now, <u>all</u> hardware had to be made compatible. Secondly, all hardware had to be installed in Fleet units, be fully supported, and personnel had to be trained to cope with all facets of the operational and support requirements. Since the Fleet's time, resources, and efforts were already programmed to fill a multitude of non-MK-48

TWS related requirements, the magnitude of the problem heightened.

In the Summer of 1971, the "players", contractors and government support agencies alike, remained essentially the same in name and number. However, their efforts now had to be adjusted to "groom" MK-48-1 and achieve total system compatability. ORL/PSU remained a technical advisor to the PM, with emphasis shifted to the nuances of the MK-48-1. Specifically, ORL/PSU was charged with analyzing the weapons system's in-water performance with the express purpose of establishing criteria affecting solution of the underwater fire control problem. NOL/WO remained the MK-48-1 torpedo technical director. NUSC remained technical director for fire control development by Librascope. Additionally, NUSC was assigned as the PM field representative, point of contact, and command responsible for overseeing and directing a wide range of Fleet Introduction support efforts. The functional offices within the Navy's Systems Command structure suddenly found their roles magnified, and their actions closely scrutinized, for their responsibilities were considerable. The torpedo and its logistic support (which will be provided for by the manufacturer until approximately 1976) had to be programmed for integration into the existing Navy structure <u>at all levels</u>. As a result, NAVORD and Naval Supply Systems Command (NAVSUP) were enmeshed in the task of assimilating this complex system into the already existing Navy weapons support matrix. The torpedo had to be fired at

sea for training purposes. Therefore, special torpedo retrieving capabilities were required. This involved Navships development of either new retrievers or alteration packages for existing retrievers. In addition, it had been determined that recovery of the 3500 plus pound torpedo or the equally heavy MTT was quite dangerous in high seas. Therefore, helo recovery was developed and Naval Air Systems Command (NAVAIRSYSCOM) was involved. For Training purposes the torpedo had to be fired at a target, and the MK-27 MTT's were still under contract to WECO. For all intents and purposes, the MTT's were torpedoes which simulated submarines both acoustically and in terms of maneuverability. They were used for the express purpose of exercise firing the MK-48 torpedo. The benefits of the MTT's are obvious, but another support chain was required, and, again, NAVORD and NAVSUP functional involvement was extensive and necessary.

Although MK-48 torpedoes produced by CLEVITE were, after "proofing" by Naval Torpedo Station, Keyport, Washington, to be delivered fully assembled and essentially ready to fire condition, the requirements of fueling, pre-shipboard issue "go/no-go" testing, minor repair part replacements, and periodic routine torpedo unit check out (torpedo "turn around") necessitated fully equipped and staffed intermediate work shops. These shops were to support torpedoes deployed in both oceans. Accordingly, the shops had to be convenient to submarine home ports, which meant that each such port required a shop located either ashore or on board a Submarine

Tender (AS). In 1971, several facilities had already been built to MK-48-0/2 support specifications. Despite the previous intent that MK-48-0/2 support systems be compatible to support the MK-48-1 torpedo, the selection of the MK-48-1 torpedo broached incompatibilities which had to be corrected. For example, the floor plans for MK-48-1 test equipment and "turnaround" was not the same as that for the MK-48-0/2. Accordingly, existing facilities had to be substantially modified to support the "winner". Construction and modification of these facilities involved Navy shore commanders who managed the cognizant bases, Naval Facilities Command (NAVFAC) who handled the contracts, prime and sub facilities contractors, NAVORD and NAVSUP who had to render logistic support, the Bureau of Naval Personnel (BUPERS) who had to staff the facilities, and the Naval Training Command who had to train the personnel. In addition magazine stowage was required and explosive/quantity implications of these new torpedoes, fully assembled and stowed in large numbers, required sufficient real estate holdings (or purchases) to ensure community safety. In the case of the AS's, each class ship had to be thoroughly "ship checked" and extensive ship alteration plans had to be drawn up. Material had to be procured by NAVSHIPS and NAVSEC to convert all AS's. Such conversions were extensive and required time. Hence, special long range scheduling had to be accomplished to accommodate other critical Fleet support requirements. Needless to say, NAVORD and NAVSUP, as well as CLEVITE were also involved

here. Finally, NUSC's Fleet Introduction support function encompassed responsibility for overseeing the general smooth flow and integration of these efforts, both ashore and on the tenders.

The torpedo loading and handling systems aboard each submarine had to be converted to accommodate the MK-48 torpedo, since the MK-48 torpedo required hardware considerations which differed significantly from older torpedoes. Therefore, each class submarine required a ship alteration package specifically tailored to its structural configuration. NAVSHIPS had to develop the plans and procure the necessary material. Approximately 12 classes of submarines were involved, with the total number of submarines exceeding 100. Some of this work could be done in shipyards during routine overhaul, but, in order to get the job done in a reasonable length of time (e.g. less than five years), much of the work had to be considered for accomplishment alongside tenders, during routine upkeep periods. Some of the key questions surrounding this problem were: Could the task be accomplished by forces afloat within the three to four week time constraint? Once these installations were completed, would the torpedo stowage and torpedo tube alignment be affected? If alignment was affected, what could be done to correct the problem? NAVSHIPS, NAVORD, and NUSC were all involved in this problem.

Submarines also faced the requirement to convert existing on-board fire control equipment and to install certain new

equipments to support and fire the MK-48 torpedo. Again, both shipyard and tender upkeep installation had to be considered. Special Librascope teams contracted by NUSC and Naval Ordnance System Support Office (NOSSO) teams were set up to affect necessary "in the field" ship board Ordnance Alterations (ORDALTS). This had to be closely coordinated with submarine availability and team availability schedules. By the Summer of 1971, most submarine fire control systems had, over a five year period, been converted to fire the MK-48-0 WECO torpedo. This represented about 50% modification to the total ship's fire control system. However, the escalation to a dual purpose weapon plus the selection of the CLEVITE torpedo required the installation of two more major, in tandem, ORDALT packages. One of the ORDALTS took four weeks to accomplish, while the other required six weeks. The four week ORDALT made the fire control system compatible with the basic dual purpose weapon, and the six week ORDALT provided the necessary ballistics for compatibility with the MK-48-1 torpedo plus certain safety improvements/interlocks. The six week ORDALT had to be accomplished in two 3- to 4-week segments to accommodate submarine upkeep periods. Moreover, the fire control system had to be operational between the first and second work segments. In addition to the very sensitive scheduling requirements necessary to bring the submarines, materials, and teams together, the actual shipboard physical effort was quite complex and required flawless planning. Ships plans, technical manuals, spare parts,

equipment history records, preventative maintenance cards, micro-fiche cards, and supply records had to be changed simultaneously as well as the parallel NAVORD/NAVSHIPS and NAVSUP supporting records and configuration documentation located shore.

There was also a requirement for updating all Navy torpedo and fire control training programs (e.g. both documentation and simulators), in order to train new personnel in each of the areas mentioned. Moreover, immediate Fleet training was required in the form of initial crew certification. This was necessary not only to permit maintenance of the new or converted equipments, but also to learn to fire the torpedo in the ocean, under real world conditions. Training was also required to permit the routine collection and analysis of torpedo firing data. The need for long range training was initially addressed by BUPERS. Subsequently, Naval Training Command became an active participant. Field activity was vigorous in local training commands such as the Naval Submarine School, New London, Connecticut. These local training commands had long been tasked to provide MK-48 TWS training once the selection process was completed. Considerable valuable information was obtained from the ships who had participated in the STP program. Post firing data analyses involved NUSC and also COMSUBDEVGRU TWO who continued to prosecute the development of firing doctrine.

The Fleet Introduction effort was in full swing by the close of Summer 1971. This required a monumental effort on the part of all players. Several problems were encountered, but, through trial and error, that led to a planning effort, which improved in its attention to detail as the effort matured, most were successfully overcome.

The PM's immediate goal was to "certify" the first fully MK-48 TWS configured submarine and its crew, and to deploy the first MK-48 torpedoes by February 1972. This required a fully converted submarine, a viable certification training program and a team to administer it, full logistic support for all shipboard MK-48 TWS equipments and functions, sufficient production torpedoes with warheads, an at-sea "certification" readiness firing program, both surface and submarine targets, a workable at-sea torpedo retrieval capability, post firing data analysis, a determination to "certify" the submarine warshot load out, and a schedule that would put it all together within the time allotted.

It was at this juncture that the ground work that was laid out, for the most part informally, between the Submarine Force, the PMO, and the various program support agencies really appeared to pay off. A concerted effort to structure a "certification" program had already been undertaken by the Submarine Force, in anticipation of such a need, during the Spring of 1971. NUSC's assistance was endorsed by the PM, and several meetings involving a cross section of operational and development agencies had already

been conducted. The resulting plan, including the allocation of special billets for the certification team, was submitted to CNO in August 1971 by COMSUBLANT. It was approved, but the permanent certification team could not be assembled on time. This dilemma was solved by structuring a temporary team using COMSUBDEVGRU TWO MK-48 staff personnel as a nucleus and augmenting it with Naval Submarine School, New London, Connecticut and NUSC personnel. The submarine selected was a unit of COMSUBDEVGRU TWO, the USS BERGAL SSN 667, which had participated in the torpedo evaluation program. Since no Fleet facility had yet been converted to handle the MK-48-1 torpedo, the torpedo preparation facility used was the existing work shop at Cape Kennedy, Florida, the facility which used to prepare torpedoes for firing at the Navy's Tongue of the Ocean 3-D Range.

The combined effort went forward as planned. The certification team and BERGAL's personnel worked to perfect the training effort, proof equipment, and certify logistic support. Exercise MK-48-1 torpedoes were loaded at Port Canaveral, Florida following training period in New London, Connecticut. With the team embarked, the exercise torpedoes were fired at both surface and submerged targets at the Tongue of the Ocean 3-D Range. The post firing data was analyzed thoroughly, and BERGAL was certified to carry the MK-48 torpedo. Warshots were subsequently loaded, and BERGAL put to sea, sporting the MK-48 TWS in February 1972.

Concurrently, the effort to convert all designated submarines and AS's to MK-48 status continued. The Submarine Force MK-48 Project Officer became the focal point for necessary coordination. The PMO provided the various inputs, but these inputs had to be interfaced with the myriad of ongoing Submarine Force requirements. Efforts such as scheduling Ship Alterations (SHIPALTS)[13] and ORDALTS were worked out quarterly within the Submarine Force by bringing together Submarine Squadron requirements, Submarine Force requirements, and MK-48 TWS requirements, negotiating with all concerned within the Submarine Force to designate submarines for alterations during specific periods. Once decided within the Submarine Force, the PM, NAVORD, NAVSHIPS, NUSC, NAVSEC, NOSSO's, Librascope, Submarine Squadrons, and all others concerned were notified by message of the dates and submarines. Details were worked out for each submarine well in advance by participating at meetings chaired by the cognizant Submarine Squadron. The Submarine Force Commanders were kept informed of decisions and progress. Thus the MK-48 TWS Fleet Introduction effort moved forward. Each facility activation and each submarine certification represented the completion of a major hurdle, case by case.

As of September 1974, the certification program is well underway, activation of MK-48 TWS workshops is progressing, and AS conversion plans are moving forward. The road has

---

[13] See Appendix III for explanation of SHIPALT program.

been both rough and long, to be sure. Many of the problems discussed herein have been corrected, and some have not. From all of this there are several lessons to be learned.

Referring as necessary to the preceding background, the authors now wish to focus on specific case studies.

MK-48 TORPEDO FLEET INTRODUCTION (A)

During the summer of 1969, LCDR Jim White received his orders to report to the staff of COMSUBLANT[1] in Norfolk, Virginia and relieve the Force MK-48 Project Officer. At the time, Jim was commanding the decommissioning efforts aboard a diesel submarine. He was elated with his orders which placed him in the forefront of a new and important program with which he was relatively familiar. He saw this as an opportunity to demonstrate his competence and enhance the probability of achieving his goals:

> "I had three goals in mind. I had the goal of getting a diesel submarine command, I had the goal of making Commander, and I had the goal of getting specific recognition for a job well done. I saw this assignment as an excellent opportunity to achieve these goals."

Upon decommissioning his submarine, Jim reported to a two-week MK-48 Torpedo Indoctrination course at the Underwater Weapons School in Orlando, Florida. There he had the opportunity to explore the minds of several people quite knowledgeable regarding the MK-48 Program. Many of these people were

---

[1] For clarification of the acronyms used throughout the case, please refer to Appendix I.

This case was written by CDR David A. Newcomb and LCDR Robert F. Hurley, Jr., under the direction of Professors William Giauque and Michael Dean of the Naval Postgraduate School, Monterey, California. All names have been disguised.

Cases are prepared as a basis for class discussion and are not designed to present illustrations of either correct or incorrect handling of administrative problems.

senior enlisted men who had been associated with the MK-48 Program for several years. On completion of this course of instruction, he felt fairly comfortable with the background education he had received and felt he had a fairly good appreciation for what would be required of the submarine force in terms of fleet introduction.

On 21 October 1969, Jim reported to the COMSUBLANT Force Weapons Officer, CDR Bill Greene, and introduced himself as the relief for the Force MK-48 Project Officer. Following the exchange of cordialities typical of the standard Navy "Welcome Aboard" situation, CDR Greene explained that he had only been in the job since July 1969 and was therefore also relatively new to the environment. Despite his relatively short apprenticeship with the submarine force weapons game, he discussed his recognition of the fact that a lot remained to be done in the MK-48 area. Answers were needed to dozens of questions, most of which were yet to be broached. He pointed out that the officer presently holding down the Force MK-48 Project Officer job had been forced by operating exigencies to devote most of his time and efforts to the management of force underwater fire control problems. CDR Greene went on to say that the MK-48 Program appeared to be headed in a definite direction and that delivery of torpedoes to the fleet was anticipated within one or two years. Accordingly, he recognized a need to shift the Force MK-48 Project Officer emphasis from day-to-day underwater fire control problems to those problems facing fleet introduction of the MK-48 Torpedo Weapons System.

Following a quick tour through the Force Weapons Office spaces to meet the staff,[2] CDR Greene introduced Jim to the present Force MK-48 Project Officer, LCDR Fred Gray, and left the room commenting, "Pick his brains, Jim. Take advantage of his experience while he's still here."

As the door closed, Fred turned to Jim and said, "I don't know what you've been led to believe about this job, but the title is a real misnomer. For the past two years, I've been beating back the flames of the force fire control problems. The only connection I've had with the MK-48 torpedo is to act as a receiving point for all MK-48 related correspondence. Oh, every once in a while, someone has a MK-48 related question, and I'm expected to answer it, purely as a function of my title. Also, the Admiral wants to be kept abreast of what's going on in the MK-48 world, so I prepare him a status update memo a couple of times a month, or bring to his attention significant MK-48 related events as they occur. I expect you'll be doing the same thing until we start seeing some torpedoes coming our way."

With these opening remarks, the turnover process began. It lasted for over a month, with Fred directing the emphasis toward fire control problems still brewing and Jim trying to resolve in his own mind the glaring discrepancy between his perception of what the job title implied and what Fred was

---

[2] See Exhibit 8 (Force Weapons Office Relationship in COMSUBLANT Staff Organization) and Exhibit 9 (Force Weapons Office Layout).

laying out before him. Jim told the casewriter how he felt during that first week:

> "It was paradoxical. I had a preconceived notion that when I got there I was going to get involved in the MK-48. Perhaps I had a distorted view, but in my mind's eye, I thought that I'd arrive as the MK-48 guy, and there would possibly be a number of things underway with plenty of fertile ground to plow. I thought that there would be a lot of things to do in the MK-48, and I looked forward to it because I felt that it was an independent operation and a chance for me to really do something. That's what I was looking for. What I was seeing and hearing, however, didn't fit this perception at all. Despite his title, it was crystal clear to me that Fred was the Force Fire Control Officer, and the MK-48 torpedo was simply a collateral duty."

As the turnover progressed, with the general introduction and explanation of areas of responsibility out of the way, detailed briefings began in the form of "chalk talks." Fred literally got up before a blackboard and introduced Jim to some of the acronyms that were part of the job, some of the terminology, and the chains of command, including names of people, that he dealt with. Focus, however, was almost entirely on the area of fire control and other weapons-oriented staff projects. This is not to say that the turnover was devoid of MK-48 matters. Certain areas of MK-48 matters were discussed such as cases where specific action had been taken. Fred related to Jim what had happened on the staff regarding MK-48 up to that point. His discussion focused on staff involvement in the CNO-established "MK-48 Coordination Group" chaired by OP-95, the "MK-48 Safety Sub-Group" and the "MK-48 Fire Control Sub-Group." Both of the latter groups were "spin-outs" of the former group. Fred showed Jim all the

minutes of the group meetings, related notes from the MK-48 Project Manager's Office, and trip reports prepared by Fred and other staff attendees. Other correspondence Fred made available to Jim included such topics as the local (Norfolk, Virginia) MK-48 facility, COMSUBDEVGRU TWO's firing doctrine efforts, involvement of the USS PARGO as the force's MK-48 "dedicated" submarine, status update memoranda Fred prepared for the Admiral, and a potpourri of MK-48 related topics which resulted in memorandum exchanges between various staff members and staff responses to outside queries.

At one point during the MK-48 turnover, Fred took Jim down the hallway and opened the door to his "library." He pointed to a couple of shelves filled with dusty books and publications and said, "This is all MK-48 stuff. I've never had much occasion to use it, but it's here to look at if you want to." They next returned to the office and Fred showed Jim stacks of MK-48 publications, manuals and letters on a large table behind his desk. Some of the stacks were at least two feet high. Fred then pulled open two file drawers filled with MK-48 material. Referring to both the material on the table and the material in the file drawers, he said, "You'll probably want to read all this stuff because there's lots of information on the MK-48 in it. It's not organized yet; you'll have to do that."

About the sheer volume of this material, Jim once quipped:

> "If you put all that crap in one pile, it probably would have measured three feet by three feet and reached from the deck to the overhead."

At this point Fred had pretty much exhausted his Force MK-48 Project Officer repertoire. He felt comfortable with the fact that he had exposed Jim to all the things he needed to know to carry on the job. Jim, on the other hand, was extremely frustrated. He recalled his feelings:

> "Having gotten a fantastic amount of information regarding the other commitments and requirements attached to the job that Fred was prosecuting full time, realizing the scope of the MK-48 effort that was required, and seeing that pile of MK-48 stuff that he hadn't even gone through yet, my feeling at this point was--well, it has got to stand out as one of the most frustrating moments in my life."

Jim didn't keep his frustration a secret from CDR Greene. CDR Greene, however, in an effort to comfort Jim, tended to dismiss Jim's asserted frustration with remarks to the effect, "Don't let it get you down, Jim. Why, in a couple of months, you'll be the local MK-48 expert."

Jim often asked himself, in response to statements such as these, "Just where in the Hell is all this MK-48 time going to come from?"

Determined to succeed, Jim began wading through the countless piles of MK-48 material, asking questions of Fred as he proceeded, and so the process continued. The stuff Jim wanted to hear, Fred couldn't tell him, but the stuff Fred wanted to pass on to Jim, he did. Moreover, when Fred felt that he had passed on what was required, he didn't want any more questions. It really wasn't until Jim had gotten himself fully submerged in the MK-48 material maze that he began to appreciate the magnitude of the problem. "Christ," he

thought, "if I ever get a rope around this mess, what the Hell am I going to do with it?"

The problem would not have been nearly so devilish had Jim been able to devote all of his time to the MK-48. Jim soon found out that little time was available to dig into the MK-48 material between responding to "fire drills," forever being interrupted by incessantly ringing telephones, and trying to learn how to do Fred's job.

After about two weeks in the office, Jim had managed to make only a small dent in the MK-48 material. Distractions were constant. In addition to the constant din of the telephones ringing, there were multiple background conversations and an endless parade of various staff personnel and official visitors coming in and out of the office. Amongst all this, Fred was forever saying, "Hey, Jim, come over here for a moment. I want you to get in on this 'flap' so you'll get a feel for the job." These "flaps" included current research projects, queries from submarine force personnel regarding documentation or policy ambiguities, fire control equipment failures aboard submarines, plus a myriad of other problems. To be sure, the bag of "flap" subjects was mixed. Furthermore, it seemed that all Fred did was handle "flaps." He didn't seem to want to relinquish that function, and Jim wasn't complaining. Jim saw Fred's continuing "flap management efforts" as an opportunity to continue his own MK-48 reading effort. As it turned out, Fred wasn't going to leave the staff until late in November. This tended to ease Jim's burden somewhat.

Tuesday of the third week of turnover started like every other day, with the telephone ringing. However, this day was different. As Jim had found out during his initial turnover briefings, the people in the Force Weapons Office did a great deal of traveling, both to sea and to various other shore commands in the routine course of business. Today happened to be a day when such travel requirements resulted in all the officers in the Force Weapons Office being absent except for Jim. In fact, Jim, the yeoman (YNI Fingers), and Senior Chief Fire Controlman Oblisk (Fred's assistant) were the only people in the office. Fingers appeared to have things under control, taking messages etc. for all the travelers. Jim noted that Chief Oblisk was taking appropriate action on a number of routine fire control matters, so barring no crisis in Fred's area, it looked like he would really be able to get back into the stack of MK-48 material again. That illusion persisted until 0930 when Fingers came in looking quite concerned. "Mr. White," he said, "CDR Whale, COMSUBDIV 62, is on the phone. He wants to speak to CDR Greene or Mr. Gunn (LCDR Bob Gunn, the Force Conventional Weapons Officer). I told him that CDR Greene, Mr. Gunn, and even Chief Torpedoman Spear (Bob Gunn's assistant) were all out to sea, but he says he's got a hot item and he wants to talk to any officer."

"God damn it!" muttered Jim.

CDR Whale spelled out the problem quickly, referring to a casualty report message sent by the USS EELFISH. It seems that the EELFISH was down south on the Atlantic Fleet Missile

Range in the throws of a SUBROC missile firing exercise, and her SUBROC fire control stabilization system failed to function properly. All on-board efforts to remedy the problem had thus far proven fruitless. A decision had to be made whether to abort the exercise, which, according to CDR Whale, was both "politically" and "operationally" undesirable, or to fire in the "emergency mode," using the internal missile gyro for a self stabilization reference. The latter tack had never been tried before. Since SUBROC firing exercises were few, expensive, and their accuracy results received considerable scrutiny, CDR Whale wanted the Force Commander's blessing (i.e. an OK by the Force Weapons Officer) before using the "emergency mode." He said that repair efforts would continue, but if all that failed, what he really wanted was a message from COMSUBLANT, by 2000, telling the EELFISH to fire in the "emergency mode."

Jim felt a little cold sweat in the palms of his hands and answered, "Yes Sir! I'll get on it right away." "What the Hell do I know about SUBROC?" Jim thought to himself as he hung up the phone.

Jim didn't know much about SUBROC at 0935, but by 1830 that evening, even though his brain felt like it had been shoved through a washing machine wringer, he knew a great deal about the SUBROC missile. In fact, you might even say that he was the local expert on firing SUBROC in the "emergency mode."

The remainder of the day was spent alternately researching technical publications and telephoning a wide range of SUBROC-oriented people. His first effort, however, was to brief CDR Greene's boss, the Deputy Chief of Staff for Polaris/Poseidon/Conventional Weapons, CAPT Ready. Although CAPT Ready wasn't up to speed on SUBROC, he grasped the urgency of the situation immediately. He directed Jim, "Get all the dope together, give me your recommendation, and if we can justify an 'emergency mode' firing, draft a message to EELFISH directing same."

By 1700, Jim had finally managed to talk to all of the SUBROC experts in NAVORDSYSCOM and NUSC, Newport, sounded out all the appropriate people on the staff of CNO, reviewed all the technical data available, and briefed both CDR Whale and CAPT Ready. At 1800, Jim was standing in front of CAPT Ready's desk with a message authorizing EELFISH to fire in the "emergency mode." After CAPT Ready released the message, and Jim delivered it to the communications center for transmission, Jim drove back to his office to collect his things and lock up shop for the day.

Once in his office, Jim sat down, propped his feet up on his desk and folded his hands behind his head. Drained of his last ounce of energy, he pondered the events of the day and those of the past 2½ weeks. He was perplexed, to be sure:

> "I looked at that pile of crap on the table behind me representing the MK-48 torpedo, and at the 'action board' on the wall representing dozens of routine fire control items that needed to be done, and, staring at the ceiling, I said to myself, "How in

the Hell am I ever going to take over the MK-48 project when I can't even do a minimum day's work?" It really wasn't until that day that I saw quite clearly that it was just about impossible to do anything beyond a normal day's work in fire control without having many interruptions on the telephone. I'd heard of situations like this, but I'd never been exposed to it myself. I just sat there, completely frustrated. I really didn't know how to proceed from that point on. It seemed like a hopeless situation, and I didn't know how to handle it. So, there I sat, the whole day shot, and I hadn't even made one step in a forward direction."

MK-48 TORPEDO FLEET INTRODUCTION (B)

About three and a half weeks into the turnover, only a week prior to Fred Grey's scheduled departure from the staff, Jim White had another serious conversation with CDR Greene. Despite the unremitting interruptions typical of the day-to-day office routine, Jim had managed to make a fairly large dent in the MK-48 paper pile. His inroads had required a lot of quick scanning. Little opportunity for detailed attention had existed, but Jim had begun to develop some strong feelings about what was required of the submarine force in the way of organization and attention if it didn't wish to find itself in the position of trying to outrun the proverbial evergrowing "snowball".

This time when Jim entered CDR Greene's office he felt that he at least had some "gut feelings" as to how they should proceed. Moreover, Jim's exposure to the hectic requirements of the Force Weapons Office permitted him to appreciate the fact that everyone in the office had lots of pressures to contend with that thoroughly obscured the MK-48.

This case was written by CDR David A. Newcomb and LCDR Robert F. Hurley, Jr., under the direction of Professors William Giauque and Michael Dean of the Naval Postgraduate School, Monterey, California. All names have been disguised.

Cases are prepared as a basis for class discussion and are not designed to present illustrations of either correct or incorrect handling of administrative problems.

Hidden in the maze of daily events was CDR Greene's "pet project" that Jim soon discovered but did not get involved with. It seems that CDR Greene had been pushing everyone in the office except Jim to complete the COMSUBLANT[1] Conventional Weapons Manual. From what Jim had been able to see, this represented a monumental effort that had already been underway for about two months prior to his arrival. Essentially, the effort attempted to bring under one cover all the conventional weapons related instructions, notices, message directives, letter directives, and miscellaneous guidance which had been promulgated over the years. In the past, lack of a "single" document covering conventional weapons matters made it quite difficult for submarine personnel to lay their hands on the required guidance in a hurry. Furthermore, it was virtually impossible for them to determine whether or not the guidance they had in hand was the most current. The present intent, once the manual was published, was to cancel all of the directives that had proliferated over the years and thereafter publish such directives as changes to the manual. It was a noble undertaking to be sure. However, it looked too ambitious to Jim, based on the time office personnel had available. It came about as a result of a promise CDR Greene made to the Admiral several weeks ago to deliver the final draft of the manual to the fleet before the Admiral was to be relieved in early 1970.

---

[1] For clarification of the acronyms used throughout the case, please refer to Appendix I.

As he took a seat, Jim recalls CDR Greene saying, "I'll be right with you, Jim, just let me finish reading chapter four of our new manual. I'm on the last page." Jim weighed CDR Greene's last comment and concluded that their concerns were miles apart: CDR Greene with his manual; Jim with MK-48 fleet introduction. Jim's gut feeling gave way to the old "acid indigestion".

When CDR Greene finally did look up he remarked, more or less to himself, "We are really going to have to bear down to get this manual out." He quickly added, "What have you got for me, Jim?"

Given the opportunity to speak, Jim didn't really know where to begin. Hesitating for a moment, he rapidly recalled the many hours he spent wading through the MK-48 morass and discussing the MK-48 with various staff members in the weapons, material, and supply offices. From all of this he had concluded that there were a considerable number of MK-48 areas which were of immediate concern to the submarine force, but he could find no evidence of ongoing, specific actions, at the fleet level, directed toward these areas.

"Well, Boss," Jim began, "as I'm sure you know, I've spent a great deal of time looking into this MK-48 business, and I've discovered a lot of areas that should concern us." "But," he went on, "I can't find anyone concerning themselves, much less doing anything about any of these areas. Let me give you an example. More than one piece of paper I've reviewed addressed the need for torpedo retrievers capable of

recovering both MK-48 torpedoes and MK-27 Mobile Torpedo Targets (MTT's) during exercise firings. And, from what I've been able to find out, our present torpedo retrievers are not capable of carrying out this task because of differences which I'm not prepared to discuss. Your predecessor accordingly submitted COMSUBLANT's recommendations for capabilities of and desired characteristics for such a torpedo retriever to the "MK-48 Program Coordination Group" (PCG) at their last meeting in April 1969. The problem seems to have stopped right there, for I am unable to identify anyone doing anything about developing a new torpedo retriever or investigating the possibility of converting or modifying our existing torpedo retrievers. This deeply concerns me. What's more, nobody's even addressed the issue of how many we need and where they are to be stationed." Jim went on to describe similar situations in a few more areas and then asked, "I know that most of our submarines have had their fire control systems MK-48 modified. That's pretty well tracked and documented. But, what the Hell else is required or is being done to ready our submarines for the MK-48? What's being done to ready our submarine tenders, our shore facilities, and our training facilities? What's being done regarding the preparation of technical manuals, development of load lists for spare/repair parts, etc? Maybe the Project Manager (PM) in Washington has a handle on all this stuff, but we, as representatives of the fleet, ought to sit down and identify each of these areas of concern, determine what's

being doen about each NOW, and, if ongoing efforts don't match what ought to be done, we ought to act accordingly. No matter how I cut it," Jim concluded, "it looks like a full time job to me."

CDR Greene had listened intently with obvious concern, but he refused to provide any blanket endorsement to drop everything else and devote full time to the MK-48. He did set up some priorities and provide some short range guidance. This didn't answer very many of Jim's questions, but it did take some of the sting out of Jim's frustrations. CDR Greene terminated the meeting with the following comments:

"Jim, I'm really pleased with the effort you're giving this MK-48 business. You can rest assured that we are going to get into it, but we are going to have to proceed with patience and deal with things in the order of their priorities. Right now, the Conventional Weapons Manual is the top priority. Providing accurate and complete guidance to the fleet regarding weapons systems they have in their hands right now is more important than preparing for a weapons system which isn't here yet. The manual should be finished soon anyway. In fact, I just told Fred this morning that if he wants to be detached on schedule, he had better get it in gear and get his input (the fire control chapter) to the manual completed. Unfortunately, you're going to have to worry about the fire control business sidy-by-side with the MK-48 for a while. Recognize that I do hear what you are saying. By mid-December, I'm told, things will probably start to

slow down a bit due to the holidays. In the meantime, make sure you have the names and phone numbers of Fred's MK-48 contacts. I'd like for you to be on the road, visiting key MK-48 people and picking their brains, sometime prior to the first of the year. In preparation, keep after the MK-48 paper work, and get everything that you can under your belt before you go."

As Jim started to leave CDR Greene's office, CDR Greene stopped him by saying, "Just a minute, Jim. I almost forgot something. In this morning's mail I just ran across a piece of correspondence setting up the next MK-48 (PCG) meeting in Washington on the 20th and 21st of this month. Let's both go to that meeting and get ourselves MK-48 educated. Everyone who has anything to do with the MK-48 Program will be there.[2] Maybe we can get some of your questions answered there."

Jim cheerfully agreed and left CDR Greene's office. Little time remained for Jim to prepare for the meeting, and Jim clearly recognized it.

The next few days passed rapidly. Jim pushed as hard as he could to read MK-48 material between other requirements. Fred was starting to worry about finishing his input to the Conventional Weapons Manual. As a result, Jim found himself getting a little more of the office fire control responsibility that Fred had, until now, been clinging to.

---

[2] See Exhibit 7 for complete list of PCG member organizations.

By November 20th Jim hadn't made too much additional headway in the MK-48 material. But, "Every little bit helps," thought Jim as he and CDR Greene entered the Pentagon on their way to the MK-48 PCG meeting. Locating Room 1E801 was a real drill in "labyrinth technology". After learning that "ring" in "Pentagonese" means hallway, and after asking directions a half a dozen times, they managed to be in their seats by 0815. The meeting got underway on schedule at 0830. The chairman was CAPT L.S. Clifford, from the office of the CNO. He headed up CNO's code OP-713, the "Submarine Warfare Branch, Undersea and Strategic Warfare Division". Jim recalled from his assault on the "MK-48 paper pile" that CAPT Clifford had been appointed CNO MK-48 Program Coordinator and MK-48 PCG Chairman in August 1968.

Looking at the list of attendees provided him, Jim noted that at least 25 different commands and agencies were present, and that some had three to four representatives. The first day's meeting lasted until 1630, with an hour off for lunch. The first hour and a half were devoted to "cleaning up" action items from the last PCG meeting held in April 1969. Most of this commentary had to do with technical problems that had been encountered during torpedo and MTT testing conducted early in 1969. The speakers included representatives from NAVORDSYSCOM, NUWRES, ORL/PSU, CNO, MASWSP, AUTEC Headquarters, NAVSHIPSYSCOM, OPTEVFOR, ... to name a few. The discussions ranged from specific aspects of torpedo and MTT technical deficiencies and nuances, to the need for

MK-48 configured torpedo retrievers, the need for a fleet firing doctrine, and specific action to ensure that both ashore and afloat commands would have the handling equipment necessary to prevent damage to MK-48 torpedoes. Jim took copious notes, while concurrently wondering how he fit into this passing parade. He knew that COMSUBDEVGRU TWO was tasked with developing the fleet firing doctrine and that CDR Greene's predecessor had already submitted COMSUBLANT's MK-48 torpedo retriever capabilities/characteristics recommendations to the PCG at their last meeting, but what about all of this other business? Should COMSUBLANT be worrying about any of this other stuff? It certainly sounded like COMSUBLANT ought to be concerning itself with the handling equipment business. After all, they would be handling the MK-48 torpedo more than anyone else in the long run.

The remainder of the morning session was given to CAPT J.W. Shurfoot, the MK-48-0 Program Manager.[3] He brought the group up to date on the status of his program, which included development of all of the ancillary support systems. His vantage point afforded him the opportunity to pass on many enlightening comments on a multitude of program areas. Shore facility workshop construction, plans for internal equipments necessary for setting up torpedo and MTT lines within each workshop, training requirements and status, open ocean exercise firing plans, production contract schedules,

---

[3] See Exhibit 5 for "Dual Effort" PMO organization.

TECH/OPEVAL submarine requirements, torpedo retrieval requirements on the AUTEC firing range, and several other topics of fleet interest were included in CAPT Surfoot's presentation.

The next day's meeting saw no change in pace. Jim hadn't been able to begin to assimilate what he had heard the previous day, and here they were off and running again. This time they started off with a status report from CAPT B.W. Compet, the MK-48-1 Program Manager.[4] This was followed by detailed discussions on services required to support the upcoming TECH/OPEVAL, the projected requirement for more changes to the submarine fire control systems, plans for TECH/OPEVAL torpedo workshop activations, and the requirement for a temporary torpedo workshop at Cape Kennedy, Florida.

It seemed that each item discussed carried with it a host of yet to be solved problems -- Although, from the prevailing attitude, it seemed that, despite the problems, the connoted outlook was optimistic. Jim, however, just couldn't bring himself around to feeling optimistic. In fact, he really felt depressed when he and CDR Greene boarded the plane for Norfolk that evening.

It was a good thing that CDR Greene had an ever prevailing good sense of humor. By the time they were ready to land, Jim, assisted in a large measure by CDR Greene's colorful prodding, had managed to convince himself that they

---

[4] See Exhibit 5 for "Dual Effort" PMO organization.

could somehow get it all sorted out. And, with a little concerted effort, COMSUBLANT's tasks could be identified. "After all," thought Jim to himself, "many of these tasks were brought to the surface by the PCG meeting." The big picture still wasn't clear, but COMSUBLANT had, by the meeting, surely been asked for specific positions on a number of issues. A great deal of further probing was required to formulate these positions. Jim knew that this was going to be a tough row to hoe, considering his working environment. Dwelling on the torpedo handling problem for a moment, Jim soon recognized that the handling operations accumulated over the life of a torpedo were manifest. And, depending upon the definition of "damage" in the MK-48 arena, the precautionary steps to be considered in developing "safe" handling equipment for the MK-48 torpedo could multiply rapidly. Similar ramifications surrounded practically all of the issues that COMSUBLANT was tasked to establish positions.

As they made their final approach to the Norfolk airport, Jim scanned the tenative list of action items he'd developed as a result of the PCG meeting. It read:

"a) Get the Admiral's position regarding future exercise firings - should they be on an instrumented range or in the open ocean? CNO OP-95 wants to know.

b) Look into future availability of 'dedicated' SSN/(s) for the TECH/OPEVAL series.

c) Find out what has to be done to get all required MK-48 ORDALTS installed in our submarines.

d) Find out what has to be done to our submarines to make their torpedo handling equipment 'safe' and compatible with MK-48.

e) Find out from the Project Manager what specific requirements he has in mind for 'Fleet Introduction' that must be satisfied by 'Forces Afloat'. (This looks both manifold and ominous.)

f) Don't forget to get more dope on the torpedo retriever business. What else do they want from us beside our capabilities/characteristics recommendations? How about recommendations regarding numbers and deployment sites on the East Coast?

g) Touch base with COMSUBDEVGRU TWO and get status of fleet firing doctrine effort. Find out if there is anything COMSUBLANT can do to assist."

The list represented a great deal of required effort, but Jim couldn't help wondering about how much he'd missed at the meeting. "Thank God it's Friday," thought Jim as he put his papers in his briefcase and disembarked the plane.

"Take your 'MK-48 hat' off for the weekend, Jim," said CDR Greene as they walked toward the terminal building. "Monday's soon enough to sort this stuff out. Preparing our 'trip report' will help you to identify what has to be done," he added.

"See you Monday," said Jim as he headed for his car.

Jim took CDR Greene's advice and spent a relaxing weekend with his family. It would be untrue however, to say that he was able to set aside completely the MK-48 burden. It was a real struggle to dismiss its ever present loom.

Jim spent Monday morning preparing the required "trip report" to CAPT Ready for CDR Greene and himself. CDR Greene was right: Preparation of the "trip report" did prove enlightening, and it eased Jim's mind considerably by passing some of his MK-48 worries "upstairs". After handing the "trip report" to CDR Greene for "chop" and "signature", Jim renewed his assault on the "MK-48 paper pile" with renewed vigor, hoping to answer some of his questions and permit resolution of his list of action items. In addition to continuing this effort throughout the remainder of the week, Jim managed to break Fred loose from his work on the Conventional Weapons Manual long enough to get the names and phone numbers of the contact points he needed to plan for his pending trip.

The following week Fred completed his input to the Conventional Weapons Manual and departed the staff on schedule. Jim soon found himself fielding all of the problems that Fred had exposed him to, plus a lot of new ones. It didn't take long for Jim to get to know Chief Oblisk a lot better. They rapidly developed a good rapport, and Jim immediately recognized that Chief Oblisk possessed a wealth of knowledge that Jim had here-to-fore failed to appreciate. There was no doubt about it, Chief Oblisk really understood the fire

control business and was a big help to Jim. Chief Oblisk seemed to know just who to talk to when it was necessary to seek advice or assistance from another command such as NAVORDSYSCOM or NUSC, Newport (formerly NUWRES, Newport). As a result of Chief Oblisk's knowledge and willingness to assist, Jim tended to rely on his help in the management of routine fire control matters more and more as time passed. This proved quite helpful, as it permitted Jim to devote more of his time to MK-48: not as much as he'd have liked to have, but more.

Jim didn't wish to be ill-prepared when he had to present his proposed COMSUBLANT positions up the chain of command to the Admiral. And, he was convinced that these positions could be better prepared after he'd had the benefit of the additional knowledge he hoped to acquire on his forthcoming trip.

Planning for his pending trip proved no simple task. Jim had a list of players as long as his arm, but he really didn't know what each of the players could do for him.[5] He had some general feelings as to what each might be able to do, but time, money, and geographical considerations prohibited visiting all or, for that matter, many of them. The competetive nature of this stage of the procurement caused several of the players to be tight-lipped, and Jim didn't

---

[5] See Exhibit 10 for organizational relationship between COMSUBLANT Staff and other MK-48 involved commands.

care to get involved in those kinds of problems at this point in time. "God only knows," Jim thought to himself, "I've got enough problems of my own."

By early December, Jim had decided that he could get the best mileage out of his trip by visiting Washington, D.C. and Newport, Rhode Island. In Washington, he would start out at NAVORDSYSCOM in the PM's office and proceed to wherever that took him. He was confident that the various visits he would make in the Project Manager's Office (PMO) would take him to other places, many of which were in the Washington area. If travels elsewhere became necessary, he'd just have to take another trip. He'd settled on the Newport visit because of NUSC, Newport's involvement in everything but the MK-48-1 (CLEVITE) torpedo, which became obvious to him through his "paper pile" efforts and his attendance at the PCG meeting.[6]

With the middle of December approaching, Jim was really surprised at how much more of the MK-48 material he'd been able to digest. He was helped in part by the fact that CDR Greene had twice placed a moratorium on all but emergency incoming telephone calls. This was done in an effort to permit all hands in the Force Weapons Office to concentrate on getting the Conventional Weapons Manual to press. This really assisted Jim as he was not involved with the manual.

---

[6] See Exhibit 11 for NUSC, Newport organization.

On 15 December, the Conventional Weapons Manual finally left the office, and the sighs of relief could be heard for miles. The same day CDR Greene called Jim into his office asking, "OK, Jim, have you got your itinerary together?"

"Yes sir!" answered Jim, and he quickly laid out his plans for CDR Greene.

CDR Greene was particularly pleased with Jim's choice of NUSC, Newport because he saw the opportunity for Jim to get some double duty mileage out of the visit due to NUSC's involvement with conventional fire control matters. Jim admitted that he didn't have too many names, but that he wasn't too concerned about that. "Because," Jim said, "once in the PMO, I'm sure I'll be directed to the appropriate party if I'm asking questions that the respondent is not familiar with. In fact," Jim went on, "one of the major outputs of this trip will be a current list of contact names and telephone numbers categorized by areas of concern/expertise."

CDR Greene agreed with Jim's proposal and asked how long it would be before he was prepared to travel. Jim responded with, "I'm planning to leave on the 18th." CDR Greene agreed, and Jim's security clearances left the staff that afternoon.

Jim had another meeting with CDR Greene the afternoon of the 17th. At that meeting, Jim discussed a list of items he'd selected for further investigation and the rationale he'd used to prepare the list. It seems that during the several weeks that Jim had struggled to assimilate the MK-48

material, a pattern began to emerge: He almost automatically found himself categorizing areas of interest under the headings of hardware, software, and training. After about four weeks, he found that everything seemed to fall into a specific number of sub-categories. These were: the MK-48 torpedo itself (three breeds: MOD's 0 thru 2), the MK-27 MTT, torpedo retrievers, MK-48 workshops and magazines (ashore and aboard submarine tenders), submarine fire control systems for the MK-48, submarine MK-48 onboard handling systems, MK-48 operational and technical documentation, and MK-48 training requirements. Jim also discussed an expanded list of questions he'd prepared addressing each of these areas. CDR Greene scanned Jim's list of questions. He was familiar with many of the questions, but a great many more were new to him. Shaking his head, CDR Greene replied, "Jim, it looks like a real bag of worms to me, and I'm more convinced now that the PMO is not going to have all the answers. Good luck, Jim," he closed, "you're going to need it."

Jim began his trip the morning of the 18th and spent a total of six days on the road. He met with a dozen people starting in the PMO. His first four interviews got him involved with specialists who wanted to discuss the technical aspects of the fire control modifications, the torpedo's engineering problems, and a myriad of other technical subjects. This really proved frustrating for Jim, not because he wasn't interested, but because no one could tell him how these things affected the submarine force. What did the PM

want from the fleet? What specifically did the fleet have to do to get ready for fleet introduction? Certainly there must be some plan for interface that requires fleet coordination and active participation? Those that did have some feel for what Jim was talking about asked questions rather than answering his.

"Holy wow! A day and a half shot to Hell," Jim thought to himself as he was introduced to the Project Manager's Plans Officer, Mr. Harold Progress, "I wonder if anyone in this outfit realizes that this God damned torpedo is being designed for the submarine force?" As it turned out, his tête-à-tête with Mr. Progress proved most memorable. Jim had no sooner explained his purpose when Mr. Progress expressed his genuine appreciation that Jim was interested in the fleet's role. He went on to express his hope that they could exchange a lot of information today and on a continuing basis. In that fleet introduction was Mr. Progress's bag, he stated that he particularly needed fleet input to a whole host of matters, but no such dialogue had here-to-fore taken place. Jim was truely amazed by the fact that Mr. Progress had apparently been virtually isolated from the fleet when the types of decisions he was tasked with making all but cried for fleet input. Within moments, Mr. Progress began bombarding Jim with a volley of questions: "Where do you want to place the first weapons? How many weapons do you want to load on each class of submarine? What shore facility do you want to see activated first? How do you

intend to use your submarine tenders? These and scores more of equally important and basic questions came at Jim like automatic rifle fire. Jim had no answers but promised to follow up on them and get them to him. Jim was becoming frustrated rapidly. His twenty questions were being dwarfed by the magnitude of the overall requirements that were unfolding before him. Could all of the submarines in the force be MK-48 configured within two years? That was what Mr. Progress was suggesting as being the goal. To confound the problem even further, Mr. Progress also indicated that more fire control alterations (not yet specified) were on the drawing board. He concurrently discussed the need for special loading and handling alterations within each class of submarine to preclude damage to the torpedo. These loading and handling alterations would come in the form of SHIPALTS[7] which had yet to be completely developed. And, Jim was reminded, the activation of torpedo workshops would require trained people as would submarine fire control systems and torpedo rooms and submarine tender facilities activation.

"I can't believe it," thought Jim as he boarded the plane for Newport, "Thank God I didn't plan to visit any more commands."

---

[7] See Appendix III for explanation of SHIPALT program.

The visit to NUSC, Newport was just as busy as the Washington visit. He visited with both MK-48 personnel and other weapons oriented people in the fire control area with whom he and Chief Oblisk had frequently conducted past business. Jim found the latter visit productive as well as informative, but he was almost preoccupied with MK-48 concerns. His points of contact in the MK-48 area included Mr. Ron Tyme in the MK-48 fire control area, Mr. John Kabel in the loading and handling area, Mr. Red House in the facilities and workshops area, and Mr. Jack Tester in the MK-48-0/2 TECHEVAL area. It became very apparent to Jim that NUSC, Newport, in their capacity as In Service Engineering Activity (ISEA) for the PM and the Technical Evaluation Director for the MK-48-0/2 (WECO) torpedo, was a prime mover in the MK-48 Torpedo Weapons System development program.

The NUSC, Newport visit strongly reaffirmed the need for immediate fleet involvement in the many areas which had been so shockingly brought into focus by Mr. Progress. Mr. Tyme, for example, had gone into the projected changes facing the already installed MK-48-0 modified submarine fire control systems. He also brought into sharp focus some of the major problems his shop was facing. Not the least of these was getting submarines scheduled for ORDALT[8] accomplishment. Mr. Tyme was well aware of the fact that future ORDALT accomplishments required greater acceleration. And, when he

---

[8] See Appendix II for explanation of ORDALT program.

combined this with the well known fact that SSN scheduled availabilities changed so frequently, he simply didn't see how he was going to be able to keep up with the projected ORDALT requirements. This problem was greatly complicated by the fact that most changes to the MK-48 torpedo required changes to the fire control system, and, in many cases, these changes were significant. Jim couldn't help but wonder if there might be anything he could do at the COMSUBLANT level to ease this situation. Tyme's problem was one of the more significant of many problems Jim heard articulated.

Jim's head was swimming as he mulled over the events of the past six days on the flight back to Norfolk. He felt much like he did the day Fred Grey introduced him to the "MK-48 paper pile."

"Thank God," he thought, "I had the foresight to schedule a few days leave over Christmas." On arrival in Norfolk, Jim dismissed the idea of visiting the office before driving home. He mused for a moment, "No way! I could be shot for even considering giving this bag of worms to the Boss for Christmas."

Jim drove home repeating over and over to himself, "I'm not going to let this ruin my family's Christmas." Jim had convinced himself of this by the time he arrived home. And, his wife couldn't have been better prepared with the big punch bowl filled with eggnog for a small neighborhood get together they'd planned for this evening.

Jim returned to the office the day after New Years, loaded for bear. "This is ironical," he thought, shuffling through his notes, "I left with twenty questions and returned with a hundred and twenty. And," he continued to himself, "most of them wanted to know what COMSUBLANT was doing about this, what was the fleet's position regarding that, or who could they talk to on the staff regarding a myriad of issues?" Regarding his feelings at this moment, Jim once recalled to this casewriter:

> "It had been one Hell of a trip, and the thing that came through loud and clear was that everyone wanted and truely needed to know something. But, it appeared, I was the first person from the fleet that they ever had the opportunity to ask. There were so damned many problems, and it appeared to me that many of them could have been solved right there on the staff."

"I've got my ducks in line now," muttered Jim to himself as he headed for CDR Greene's office.

Jim was seated, notes in hand, when CDR Greene entered his office. "You must have a lot to say," CDR Greene said as he seated himself behind his desk.

"Yes sir!" replied Jim, and he began to unload. He began by elaborating the more pressing problems as he saw them: Namely; the need to select "dedicated" submarines for the forthcoming TECH/OPEVAL series; the need to see what could be done to stabilize SSN availability schedules to ease the fire control ORDALT accomplishment problems faced by Mr. Tyme of NUSC, Newport; and the need to answer many of the basic yet important questions posed by Mr. Progress of the PMO. He then went on to discuss the implications of what

apparently had to be done within the submarine force to receive the first torpedoes in operational submarines. Specifically; he brought to CDR Greene's attention the fact that hardware and training requirements were still not defined, the fact that better than a hundred submarines have to undergo yet unclear material alterations in the loading and handling area which varied with submarine class, the fact that the overall MK-48 support system and its requirements for submarine tenders, shore stations, torpedo retrievers, and even the submarines themselves were not yet clearly defined, and the startling fact that the "master plan" called for a limited number of torpedoes to be delivered to the fleet as early as 1971. Jim continued for over an hour. And, it would be safe to say that CDR Greene probably felt much like Jim did when he was listening to Mr. Progress.

"One Hell of a collateral duty, eh Boss?" Jim concluded. "Chief Oblisk has been a real help in the fire control area, leaving more time available for me to romance the MK-48, but he's due to leave soon. Frankly, I'm a bit worried. I don't know what kind of replacement I'll get. Even if he's as good as Oblisk, I'll be carrying both jobs until he gets up to speed. I hate to think about the other alternative. One thing's clear, Boss," Jim continued, "the paper pile was just the trunk of the 'MK-48 Elephant', and I really don't know how much more of him remains to be seen."

"That's a fair appraisal of the situation," CDR Greene interrupted, "and I recognize that you will have to spend a

lot more of your time on the MK-48. But, Jim," he continued, "we in our shop can't answer all of these questions by ourselves. We will have to 'staff' each one of them."

Jim rogered the CDR's comments, and they both decided that they must categorize the areas of concern into the defined areas of responsibility of the various staff codes.[9] Once this was done, it would be necessary to bring these items to the attention of the cognizant senior staff officers heading each of the involved staff codes and seek their support. Individual items could then be farmed out to the appropriate action officers throughout the various staff offices. The all important responsibility for follow up would still rest with the Force Weapons Office: specifically, with Jim White. This seemed like the way to proceed, and Jim left CDR Greene's office with the feeling that he finally had a real direction to point toward. "This is truely refreshing," Jim thought as he headed for his desk.

Jim spent the first part of January working on his categorization efforts. He then prepared numerous memoranda and forwarded them to the appropriate staff codes via CDR Greene. As he was preparing the memoranda, he was forced to reread much of the correspondence in the "MK-48 paper pile". Rereading it he couldn't keep from wondering why much of it wasn't initially distributed to the concerned staff codes.

---

[9] See Appendix IV for charters/responsibilities of COMSUBLANT functional codes. See Exhibits 8 and 9 for Force Weapons Office Relationship in COMSUBLANT Staff organization and Force Weapons Office layout, respectively.

"After all," he thought to himself, "most of this stuff clearly falls into the areas of training, operations, material, and logistic support. A lot of this stuff is purely weapons and clearly my bag, but I really wonder how much of this stuff would be in this pile if MK-48 didn't appear on it somewhere. I'll bet the Yeoman in the mail room just looks for a few key words in correspondence titles to guide his routing decisions. That's why it's in this pile: because MK-48 appears on the front page somewhere."

Within three weeks, all available information had been distributed to the various staff codes, noting the urgency of the situation, and requesting early efforts to seek solutions so that potential crises may be avoided as the fleet introduction date neared. The full dimensions of the problems in each area remained to be scoped out, but, with the full support of the responsible staff offices focusing on the problems, it was anticipated that a plan of attack could be hammered out within a few weeks.

The first requirement for follow up on the part of the Force Weapons Office came in the form of an UNCLASSIFIED message[10] and two or three telephone calls from the PMO. These communications were attempting to schedule the USS TRIGGER, a diesel submarine, for the long anticipated and

---

[10] Messages below the security classification of SECRET are routinely distributed to all concerned COMSUBLANT staff officers twice daily: In the morning and after lunch. Determination of who "concerned" officers were was left to communications center personnel.

necessary SHIPALT required to convert the submarine's on-board torpedo loading and handling equipment to a MK-48 compatible configuration. The work was to be accomplished by the Charleston Naval Shipyard (CHASN,NSY) in Charleston, South Carolina, but a certain amount of scheduling and coordination was being requested of COMSUBLANT to ensure that the job would proceed smoothly. Jim discussed the matter with CDR Greene, and it was agreed that the nature of the work, scheduling and coordination of diesel submarine hardware modifications, clearly fell under the purview of staff code N-403, the Diesel Submarine Material Officer, whose office was just down the hall. Accordingly, Jim gathered together all of the communications received, including memos summarizing telephone conversations, attached them to a brief memo that he wrote to CDR Swain (N-403), and forwarded the package to him through the inter-office mail system as a matter under his cognizance.

At 1400 the same day, while CDR Greene was standing by Jim's desk discussing a fire control matter, CDR Swain entered the office. He was red in the face and obviously quite irritated. "God damn it! Is this your memo?" he blurted while looking Jim straight in his eyes. Failing to cast a single glance in CDR Greene's direction he continued, "Look here! Don;t be trying to pawn off your work on us. This is what you're supposed to be looking after. You are the MK-48 Project Officer, aren't you?"

"Well yes," replied Jim, "but this appeared to be diesel material business. We certainly aren't trying to duck out of anything that falls into our area of responsibility."

"You're here to introduce the MK-48 Weapons System, and this is part of it. I'll be damned if I'm going to start doing your work for you," replied CDR Swain.

"OK, Commander," replied Jim, "I had no intention of disrupting the staff over this. It's pretty routine, and I'll be happy to look after it if you feel that strongly about it. Pretty soon though, I'm going to reach a point when I'll need your help and the help of several other staff codes."

CDR Swain calmed down somewhat, but he didn't back down a bit. After a few more words, the atmosphere grew a little less tense, but CDR Swain's position still didn't budge.

As the confrontation wound down, Jim couldn't believe what had happened. If he was frustrated before, he was ready to cut his throat now. If this was a preview of what he could expect of the rest of the staff, he saw an impassable morass of work ahead. And, with Chief Oblisk soon leaving, he really didn't know how in the Hell he was going to be able to manage it all.

While all of this was in progress, CDR Greene had found himself a seat and propped his feet up on an empty desk to listen. He didn't enter a word until CDR Swain had left the room, and he smiled slightly when that happened. "Jim," he said, "I think we've done a pretty good job outlining the

problem up to now, but I can tell you one thing right now: These people aren't going to do a damned thing for us. And, I really don't know if I blame them. The routine in every office of this staff is just as hectic as ours. They're already loaded up to the eyeballs with their own work. They very well know their areas of responsibility, but they're not going to volunteer for additional work. What's more, if they respond favorably to one of your memos, they virtually open the door for further invitations to more work. No, Jim, these people just aren't going to worry about fleet introduction of the MK-48. And, what really worries me is the fact that I'm not really sure that you can do a whole Hell of a lot by yourself. I'm certainly open to suggestions though."

MK-48 TORPEDO FLEET INTRODUCTION (C)

February 1970 began with Jim seriously considering dropping his one man assault on the MK-48 fleet introduction problem in favor of fielding individual MK-48 problems as they arose. Lord knows he had more than enough to do in the fire control area, and no one else on the staff short of CDR Greene appeared enthusiastic about assisting Jim in the management of MK-48 problems.

This dilemma in which Jim found himself engulfed was confounded by the loss of Chief Oblisk on February 10th. Jim really hadn't realized how much he had depended upon Chief Oblisk until he left the staff. His replacement, Senior Chief Firecontrolman Sharp, was also new to staff duty. He came to COMSUBLANT[1] Staff from instructor duty at the FBM Training Center in New London, Connecticut. There he enjoyed an excellent reputation instructing FBM Submarine Fire Control Parties, made up of both officers and enlisted men, in the MK-113 Fire Control "Attack Teacher". However,

---

[1] For clarification of the acronyms used throughout the case, please refer to Appendix I.

This case was written by CDR David A. Newcomb and LCDR Robert F. Hurley, Jr., under the direction of Professors William Giauque and Michael Dean of the Naval Postgraduate School, Monterey, California. All names have been disguised.

Cases are prepared as a basis for class discussion and are not designed to present illustrations of either correct or incorrect handling of administrative problems.

despite Chief Sharp's excellent reputation, he was unfamiliar with staff duty, and, like Jim on his arrival, he couldn't believe what was going on around him. In fact, for the first few days following his arrival, he just sat at his desk, awe-struck with an "I don't believe it" look on his face, while he passively surveyed the chaotic office routine.

Jim was dismayed as he observed Chief Sharp's arrival behavior. He realized that Chief Sharp's past experience had been pretty much operational and hardware oriented, and, as a result, it was really going to take some time for him to acclimate to the staff environment. What really worried Jim was the possibility that Chief Sharp, like many senior enlisted men, could not adjust to the staff routine.

One thing Jim had managed to do before Chief Oblisk departed was to have him make up a list of all of his outside contacts, their telephone numbers, and the function each performs. Chief Oblisk turned this list over to Chief Sharp and gave a copy to Jim. It goes without saying that this list saved the day on several occasions by permitting rapid reaction to various emergency fleet equipment support requirements. It also opened Jim's eyes further to how much Chief Oblisk had really been doing for him.

It was in this environment that Jim pondered the future of COMSUBLANT involvement in MK-48 fleet introduction. The daily routine was burying him, but he never lost sight of the fact that MK-48 decisions were going to be made, with or without COMSUBLANT involvement, that the submarine force was

going to have to live with over the entire life of the MK-48 Torpedo Weapons System. Accordingly, the submarine force should have a greater vested interest in MK-48 fleet introduction than any one else in the Navy. Jim just couldn't imagine how they, the submarine force, could sit back and not get involved in the decision making process. To think that important decisions could be made which would affect the submarine force for years to come, by people who really didn't always understand the problems of the fleet, while the fleet could but would not involve itself in the decision making process, sickened Jim. He recalled the MK-37 torpedo which had been with the fleet since the mid 1950's and recognized, as did many more submariners, that some 20 years later we still didn't know how to handle or shoot it properly. "Christ," he thought to himself, "do we really have to go down that road again? Why can't we get involved and be ready this time?"

By the 20th of February Jim had decided that, since a torpedo development program of MK-48 magnitude comes along only once every 25 or 30 years or so, he wasn't going to forget past mistakes. Rather, Jim concluded that through the benefit of these mistakes, he, with or without help, was going to attempt to represent the submarine force in the MK-48 Program and get involved, full-time, some how or another. Looking over at Chief Sharp sitting at his desk Jim thought to himself, "Chief, like it or not, you are going to become the Force Fire Control Officer."

Moments later Jim was standing in front of CDR Greene's desk. "Boss," he said, "do you remember your comments the day CDR Swain was in here raising Hell about the installation on TRIGGER? Well, as you said, it's pretty obvious from what happened with TRIGGER that we're not going to get a Hell of a lot of help from the staff in dealing with the MK-48. I don't know what I'll be able to do alone, but I want to try. I want to give Chief Sharp the entire fire control load -- everything: decisions, letters, messages, files -- the whole thing. I'll require him to keep me briefed and to route all correspondence and decisions through me, but I want him to do the job. I will remain accountable if it doesn't work, but I want to go full-time on MK-48 business -- it's the only way I can get out from under and get moving."

When Jim had finally gotten it all off his chest, he took a deep breath and waited. In retrospect, Jim wasn't sure why he expected to get some kind of backlash. CDR Greene time and again had proven himself a very practical individual. He made it a practice to let everyone, officer and enlisted alike, have just enough rope to get the job done, but not enough to hang themselves with. This proved no exception -- after weighing what Jim had said for a few seconds, he replied, "Jim, MK-48 and fire control are yours. Chief Sharp works for you. If you want to find out if he can 'hack it' -- go ahead -- it's your decision."

Jim felt relieved as he left CDR Greene's office. He returned to his desk where he collected his thoughts and decided not to break the news to Chief Sharp until the next morning -- better to sleep on it and see how he felt about it tomorrow.

Jim wrestled with the idea overnight and concluded that giving Chief Sharp the fire control load was the only recourse he had available. The immediate problems he had to cope with were how to break the news to Chief Sharp, and, more importantly, how Chief Sharp was going to accept the news.[2]

The following morning Jim called Chief Sharp over to his desk and invited him to join him for a cup of coffee. After drawing their coffee they returned to Jim's desk and began a conversation that neither would ever forget. After getting the generalities out of the way, Jim vectored the discussion toward the MK-48 Torpedo Weapons System: Specifically, the challenge facing fleet introduction and the need for COMSUBLANT Staff to get involved. He discussed his own dual role as Force Fire Control Officer and MK-48 Project Officer, the obvious inability to do both jobs concurrently in an effective manner, and the paradoxical reality that the submarine force desperately needed to have both jobs performed

---

[2] Students unfamiliar with the Navy, specifically the type of performance that can reasonably be expected of or the types of responsibilities normally assigned to Navy Chief Petty Officers, please refer to Appendix V.

effectively. Jim then began to level with the Chief. "Chief," Jim went on, "the only way we can get both jobs done effectively is to share the load. And, I feel that your seniority and excellent record of past performance quite appropriately justifies my turning the Force Fire Control load over to you."

Chief Sharp didn't even flinch.

This somewhat startled Jim in that he wasn't sure that the Chief really understood or appreciated the impact of what he had said. "That's right, Chief," Jim continued, "for all intents and purposes you will be the Force Fire Control Officer. I'll expect you to route all outgoing correspondence through me and keep me informed regarding the problems you encounter and the decisions you make. And, most importantly, I'll expect you to seek my assistance in matters or decisions that <u>you</u> think I should be involved in, regardless of reason."

To Jim's complete amazement, Chief Sharp still didn't bat an eye. And, this time, Jim knew damned good and well that the Chief understood him.

When later asked by this casewriter why revelation of his new and expanded assignment failed to elicit any apparent emotional response on his part, Chief Sharp responded:

> "To this day I still don't know how I was supposed to have responded. Quite frankly, I was just waiting for someone to tell me what was required of me. And, that's what Mr. White did."

From that point on, Jim tried hard to let Chief Sharp field all the fire control problems. Chief Sharp was obviously struggling to keep his footing during the next couple of weeks, but he was a willing worker and appeared to be doing his best. At first, Jim watched Chief Sharp like a hawk, and he often found himself getting involved in fire control matters more than he wanted to. On balance, however, Jim soon realized that he really wasn't getting too involved: Chief Sharp wanted only enough of Jim's time to ensure that things were being handled correctly. As the Chief's confidence grew, the routine "flaps" crossed Jim's desk much less frequently and almost always not until the Chief had staffed up a proposed solution. As a result of all this, Jim was able to fully devote 90% of his attention to the MK-48 by the second week of March.

In addition to continuing to broaden his grasp of the MK-48 Program's idiosyncracies through further reading and telephone contacts, Jim was still struggling terribly with the mental challenge of how to get the others on COMSUBLANT Staff to take an active role in the business of preparing the submarine force for fleet introduction of this new weapons system. He had nothing more persistent on his mind, and he desperately wanted to come up with a solution. He was convinced that there had to be a way, and, after a great deal of deliberation, a possible solution began to take shape.

Jim made up his mind in mid March that the only way to get the MK-48 dope out to the staff was to stop chipping away at the individual areas of concern. Rather, he had to "get a rope around the whole thing". He had to let everyone on the staff get a feel for the dimensions of the entire problem. Specifically, he decided to put together a detailed review of the complete MK-48 Program from a submarine force point of view: As the end user of the system. He would compile his findings in writing, identify all known items that should be of concern to the submarine force, highlight associated problems, and make proposals and recommendations, where appropriate, regarding what COMSUBLANT should do and what staff codes were recommended to take action.[3] In the back of his mind, Jim knew that some staff officers might take offense to his recommending that they take an item for action, but he also knew that, if he were to do everything by himself, other staff officers might take offense to his doing things which clearly fell into their areas of responsibility without consulting them.[4] No matter how he looked at it, it was six of one thing and a half a dozen of another. He therefore clung to his original idea and decided to title his paper the "MK-48 Program Staff Review". He would forward the paper up his own chain of command to the Admiral,

---

[3] See Exhibit 8 for Force Weapons Office relationship in COMSUBLANT Staff organization.

[4] See Appendix IV for charters/responsibilities of COMSUBLANT functional codes.

providing copies to the Deputy Chiefs of Staff and the Assistant Chiefs of Staff for further distribution within their respective departments. If the Admiral bought it, things would have to happen.

Jim became increasingly determined the more he thought about going forward in this manner. He counted several reasons for launching this new effort: First, he was convinced that whatever the effort necessary, the submarine force had to wake up and prepare for this new weapons system or the long range cost could be catastrophic; Second, he had arrived at a point where he really thought that he could put together a cogent pitch; Third, he was tremendously encouraged by the dynamic and significant interest in COMSUBLANT's projected input by Mr. Progress in the Project Manager's Office (PMO); Fourth, he was quite pleased and further encouraged by the liaison that was manifesting between himself and various key people on the staffs of COMOPTEVFOR, COMSUBDEVGRU TWO, and NUSC, Newport; Fifth, he was getting strong backing from CDR Greene; Sixth, he was being freed of the fire control shackles by the fact that Chief Sharp was really beginning to take hold; And last, and probably most important, he was beginning to get the message that the new Admiral at COMSUBLANT's helm since January was interested in and concerned with MK-48. In fact, despite the failure of COMSUBLANT staff performance to reflect it, the new Admiral let it be known to his senior staff officers shortly after his arrival that fleet support of MK-48 introduction stood high in his list of priorities, and that he accordingly expected full staff support of MK-48.

After mentally outlining his plans and reaffirming the rationale of his proposal, Jim became quite concerned, for he recognized that such a review, if done properly, would necessarily be voluminous. What worried Jim was the likely possibility that the volume would turn the Admiral off before he read the first page. Alternatively, Jim began to consider preparing and delivering a verbal pitch to the Admiral and senior staff officers. This too would necessarily be lengthy. More important though, and the reason Jim dismissed the idea, was the fact that a verbal presentation failed to lay a permanent foundation upon which others could later reference or place in the hands of other staff members. "No," thought Jim, "it had to be a written review." Jim broached his idea and his concern over the necessary volume to CDR Greene, for Jim recognized that the "Boss" was somehow usually able to "separate the wheat from the chaff".

CDR Greene's response to Jim's reported dilemma gave him the push he needed. "Jim," he said, "don't sweat the number of pages. Something needs to be done, and I believe that the Admiral will read such a summary with great interest -- so, get your fanny back to your desk and get cracking."

As expected, the undertaking turned out to be something more than a trifle. For Jim, the remainder of March was built around his "MK-48 Program Staff Review". His time wasn't all spent writing, however. His first big hurdle was to determine how he should format such a study. After several false starts, he essentially came right back to the

natural category sequence that his review of the MK-48 files yielded. First he selected four broad categories: hardware requirements, training requirements, exercise firing policy, and post firing analysis and data employment. He then listed pertinent sub-categories under each of the four headings as appropriate. Under hardware requirements he listed: torpedoes, retrievers, targets, MK-48 shore facilities/tenders, loading equipment, submarine MK-48 fire control system conversions, and firing doctrine. Under training requirements he listed: torpedo/target training (general), retriever crew training, shore facility and tender crew training, and submarine crew training/instructor training. Exercise firing policy and post firing analysis and data employment stood on their own as major categories without further breakdown.

With categorization out of the way, Jim next decided that for each category or sub-category, as appropriate, he would present the material in three steps: current and projected status, considerations (with focus from submarine force point of view), and proposals (for staff action were appropriate).

Once he had his outline in hand, Jim set to work extracting data from newly organized files, one category at a time. He supplemented this effort with an undeterminable number of telephone calls, visits to COMOPTEVFOR in Norfolk, and another trip to Washington to discuss each category with Harold Progress. Harold Progress was quite receptive to this new-found informal liaison with the fleet, and he placed

a high value on it. So much so that he reciprocated by visiting Jim in Norfolk two weeks later. These two meetings proved themselves so productive that they set a precedent for a pattern which was to be followed by Jim and Harold Progress throughout the remainder of their relationship. Formal, direct liaison with the PMO was not one of the prerogatives afforded COMSUBLANT.[5] Both Jim and Harold Progress recognized this fact clearly and took maximum advantage of their informal relationship. During every one of their periodic meetings, each of Jim's categories was discussed in detail, providing each with a complete and candid update. After these six to eight hour skull sessions, Jim always felt like he'd been both a participant and an administrator of some kind of an intensive oral examination.

Through Harold Progress, the vastness of the PM's empire was unfolding before Jim, producing an endless flow of new and changing information. He knew he was getting candid glimpses of fantastically complex and dynamic plans. An intricate mosaic was evolving while simultaneously undergoing change in various ways -- almost daily in Jim's eyes. He often felt that he was being afforded privileged information and had to proceed with caution regarding the manner in which he presented such information, lest he substitute hearsay or supposition for fact or compromise a confidence. But, most assuredly, it was quite evident to Jim that many decisions

---

[5] See Exhibit 12 for organizational relationship between COMSUBLANT Staff and the PMO.

that would affect fleet introduction (and beyond) were formulating on high and that related fleet inputs were needed and appropriate, whether or not formally solicited.

By early April, Chief Sharp appeared to have come to grips with staff life. He was improving steadily in his ability to draft correspondence, render sound judgments, and sense what needed the boss's attention as opposed to what he could handle by himself. Jim was particularly impressed by the fact that Chief Sharp seemed to be effectively expanding his informal network of communications with other commands involved in submarine fire control hardware support functions. While exercising this network, he turned up some significant information regarding apparent problems in the MK-48 fire control area. He presented this information to Jim and it was incorporated into the fire control portion of the "MK-48 Program Staff Review". In retrospect, Jim recalled, "In several areas it appeared as if Chief Sharp had put his finger on the tip of an iceberg named trouble." Chief Sharp had cultivated several points of contact that Jim knew they would have to follow up on in greater detail as soon as the "MK-48 Program Staff Review" was out of the way, and he so noted the need for such action.

Recalling that early period on the job, Chief Sharp reminisced:

> "I had never had an administrative job like that before. And, I really didn't know what was expected of me, even though Mr. White had explained the job to me. It probably took me a full six months of nosing around, listening and asking questions before I

really became productive and could do something more than put out brush fires. I didn't realize it at first, but a good many of the problems in the fire control area that I tackled in those days were symptoms and not really causes. There were some deep seated causes in many cases, but it took me a long time to see the light. I had to get to know the key people in the 'Naval Ordnance Community' that administered the procurement and support of our fire control hardware. Oblisk's points of contact were good for fighting the brush fires, but I soon found out that there were a lot of people that we should have been talking to in NAVORDSYSCOM, NUSC, Newport, and in several other commands that had a lot to do with administering our ship's ordnance hardware installations, ORDALTS,[6] and configuration records. Apparently, no one on the staff had ever communicated with some of these people before. It was a real education for all concerned. Among other things, it began to appear to me during the first couple of months in the job that we really didn't have any accurate knowledge of or control over our own submarines' ordnance configurations."

On thing Jim hadn't put much effort into during the months of March and April was the pursuit of the original intra-staff memo effort (to get staff support) that he and CDR Greene had launched in January. He had gotten some feedback from most of the staff codes notified. In most cases, the replies acknowledged receipt of the information and either indicated that action would be taken as appropriate or stated briefly that such and such had been done and action was complete. The impression Jim got was that, even now, no one was very worried, and MK-48 would stay on their back burner until some force, still unbeknownst to Jim, pushed it to the forefront. "That will probably be receipt of the first operational torpedoes," mused Jim.

---

[6] See Appendix II for explanation of ORDALT program.

In early April, the Force Weapons Office had started a separate MK-48 incoming/outgoing message file (there-to-fore, the MK-48 message traffic had been mixed in with all other office messages). Jim had also decided, for the time being, to field any incoming action himself, after touching base with the other ("quasi" he dubbed in mentally) cognizant staff codes, before initiating any official response. The one or two times he took the initiative, after checking with the appropriate code, he didn't get any real complaints. Jim recalled:

> "Just a few comments to let me know that they hadn't really relinquished their authority, but that they had no objection to me doing their work for them."

Jim didn't really mind all that, however, for he liked the feeling that the N-62 office was actively overviewing, taking action, and interpreting incoming MK-48 information for COMSUBLANT. He dearly wished, though, that he could keep formal control and concurrently be able to vector appropriate staff interest and action to areas where it was deemed appropriate.

Actually, aside from the various planning correspondence emanating from the PMO concerning TRIGGER's pending conversion to MK-48 configuration, COMSUBLANT really hadn't been formally involved with anything at the PM level, and, as far as Jim could see, no significant opinions were being openly sought from COMSUBLANT. However, it was not uncommon for the PM to communicate directly with the Admiral or other senior staff officers concerning any number of things.

Fortunately, for Jim, CDR Greene was usually made aware of such communications, and he related them to Jim. Jim, on the other hand, was being permitted an informal peek into the PM's club house through the Harold Progress window. But, there were people in the program that Jim had talked to that gave the impression that COMSUBLANT's (Jim's) interest was premature. Perhaps the responses of two or three of the people in the program could have been interpreted by Jim as suggestive that he was meddling. This occasionally occurred when Jim's questions hit a sore spot. Also, fortunately for Jim, no one turned him off.

As he gained program inroads, he gained other strong feelings and impressions. Jim later recalled that he might, in retrospect, even say that some of these stimuli were almost subliminal. For example, he had been exposed to so many people and so much data that he wasn't always sure that he had been able to clearly discern totally candid information from "edited" information. He certainly felt that Harold Progress had always been candid, but, looking back, Jim recalled:

> "There were some people who were being very protective of their jobs and functional areas of interest at the expense of the program. I began to realize this more clearly at a later date. I found out that few people wanted to admit short-sightedness or shortcomings in their areas of responsibility. I also found out that there were not too many people who understood clearly how their area of responsibility interfaced with others. In fact, two of the field activities, NUSC, Newport and NAVORDSYSUPOLANT, who were both in the ORDALT administration and installation business, had an almost adversary relationship at that point in time. That certainly didn't

do anything to help promote the necessary intra- or inter-command communications. Although lots of people had explained their problems to me, at that point it was really difficult to grasp the aggregate implications or their rationale."

In any event, the TRIGGER effort had certainly not become too complex. Jim, working through staff code N-31 (Operations) and the COMSUBRON FOUR Weapons Officer in Charleston (USS TRIGGER's parent Squadron),[7] had determined the dates that TRIGGER could be made available for the MK-48 work to be accomplished. Then he simply initiated a message to the PMO, including interested commands as information addressees, setting the conversion dates. The principal work on TRIGGER was to be done by the Charleston Naval Shipyard (CHASN,NSY) in accordance with specifications drafted by NAVSHIPSYSCOM and NAVSEC in support of the PM. Neither Jim nor any one else on the staff had seen all of the detailed specifications, but the work was reported to be similar to the prototype efforts already completed on JACK and PARGO. That work had essentially "softened" the torpedo handling and storage equipment in each submarine to minimize damage to the MK-48 torpedo. From what Jim was able to find out, CHASN,NSY was going to remove all of the torpedo storage skids in TRIGGER's torpedo rooms and coat or replace all metal that would come in contact with torpedoes with a special nylon or polyurethane substance.[8] The same treatment was to be given to all torpedo

---

[7] See Exhibit 13 for SUBLANT organization.

[8] See Exhibit 14 for description of typical submarine torpedo rooms.

lashing straps, hooks, special handling nose and tail pieces, and the submarine load line rollers.[9]

In any event, after the TRIGGER scheduling message had been "on the air" for a couple of days, Jim had, in the course of a few telephone conversations dealing with MK-48 matters, received favorable reference to the message. That indicated to Jim that all concerned felt that the TRIGGER job was on track. It was a "rinky dink" accomplishment on balance with the other ongoing efforts at the PM level, but it was somewhat gratifying to feel that this small initial involvement had been executed smoothly.

On 20 April 1970, Jim turned his rough draft of the "MK-48 Program Staff Review" over to YN1 Fingers for typing. The completed review was 23 pages in length, less the cover letter.[10] It had required one Hell of an effort to crank it out, but Jim felt sure that it clearly addressed the known issues and they were presented in such a way that they could not be ignored. And, the icing on the cake was his attached letter proposal reestablishing the COMSUBLANT Staff "MK-48 Torpedo Working Group", chaired by CDR Greene. It would be comprised of representatives from each staff code, and, if approved, it would convene periodically to review all required staff actions and assign appropriate tasks to cognizant staff codes. Jim's research of the old MK-48 files revealed that such a

---

[9] See Exhibit 15 for description of submarine onboard torpedo loading and handling equipment.

[10] See Attachment (1).

group existed some time ago, but disuse or some other unknown reason caused it to dissolve or simply fade away into oblivion.

Jim affixed his signature on the smooth forwarding memorandum on 24 April and placed the review on CDR Greene's desk. Within the hour CDR Greene emerged from his office. "Jim," he said, "I'm going to hand carry this over to CAPT Ready and express my endorsement verbally -- Your paper speaks for itself."

Two hours later CDR Greene returned and reported that CAPT Ready had read the review, was anxious to get staff action underway, and had forwarded the review to the Chief of Staff. Jim was on pins and needles for the next two days wondering how the Admiral would receive it. "Would it get past the Chief of Staff -- maybe it was too long?" worried Jim.

Jim had the answer on 26 April when CDR Greene returned from a conference at headquarters. CDR Greene had the original in his hand when he entered the office. "Jim," he said flipping the review face up on Jim's desk, "this time you've hit paydirt. The Admiral read it cover to cover, he buys your recommendations, and he wants action. As soon as the 'Working Group' is formed up, we'll convene the opening meeting and get the show on the road."

Recalling his elation on that occasion, Jim remarked to this casewriter:

> "I knew we were on our way at long last. We had the tools we needed, we had support from the top, and we

would get staff participation. There was a lot of work to be done, but with the entire staff vectored in on the problems, we would get the job done."[11]

---

[11] Due to time and volume constraints, the authors could not pursue the research required to develop case studies for each of the subject areas addressed in Attachment (1). While each area provides very fertile grounds for further case study development, the authors elected to concentrate their remaining research on tracking the efforts leading to the development of the final plan for hardware conversion of submarines to full MK-48 configuration. It should be recognized that all of these case studies address Atlantic coast efforts by COMSUBLANT. Activity of much the same nature took place in the Pacific, but the authors know little about the efforts of COMSUBLANT's Pacific counterpart, COMSUBPAC. This is not to suggest that COMSUBLANT and COMSUBPAC operated independently regarding MK-48 Fleet Introduction -- to the contrary, there was common effort and continuous liaison between CDR Green and Jim White, and their counterparts throughout the Fleet Introduction Effort. The impact of that effort would lend itself to further case studies.

Attachment (1)

"MK-48 Program Staff Review"

This review has been obtained from the COMSUBLANT archives. In its original form it was classified. Classified portions have been deleted, accounting for the various discontinuities encountered.

24 April 1970

MEMORANDUM FOR OD

From: N622
Via: N62 N6 01

Subj: Fleet Introduction of the MK 48 Torpedo; staff review concerning

Ref: (a) Chief of Staffs' Memorandum of 22 December 1966

Encl: (1) N622's MK 48 Program Staff Review
(2) Proposed Memorandum to reconvene the MK 48 Staff Working Group

1. Recent communications with the various program offices concerned with the development of the MK 48 torpedo and associated support functions have led me to conclude that program developments have reached a point that warrents a coordinated staff effort to review all areas, in terms of readiness to support fleet introduction and beyond.

2. It is now apparent, in my opinion, that the development status of many program support functions portend significant constraints during introduction. In addition, there are projected employment considerations, beyond introduction, that require more detailed study and planning. High level policy decisions, regarding employment of the MK 48, are formulating and I believe that it is time that official Submarine Force positions be taken, where appropriate, on such matters as training, positioning of the initial weapons, support deficiencies, open ocean firing versus on range firing and submarine participation in fleet introduction (i.e. selection of squadron(s)/ships).

3. Enclosure (1) lists many of the considerations affecting introduction and the projected employment of the MK 48 torpedo, undoubtedly there are more. Some areas are being effectively pursued independently by other staff codes; the intent here is to focus attention on these related matters and elicit a coordinated staff effort to ensure adequate in depth/breadth review, understanding and preparedness.

4. Reference (a) established the staff "MK 48 Working Group". N42, now N62, was appointed chairman. Deputy and Assistant Chiefs of Staff were tasked to appoint officer representatives to that working group. Because of program slippage, group meetings were suspended indefinitely. It is requested that the "Staff Working Group" be reconvened and that it remain functional. Enclosure (2) is forwarded, as the proposed official notification of re-establishment. Copies of this review (enclosure (1)) will be forwarded to DCOS and ACOS, for review by members of their departments. It is recommended that the first Working Group meeting be held on 7 May 1970. As this coordinated effort progresses I believe it would be desirable to include SUBDEVGRU TWO and Submarine School (and/or perhaps other interested parties) as working group members.

5. Based on informal communications received from MK48 Project Manager's Office (PMO) (NAVORDSYSCOM) and CNO (OP-31), it is recommended that the first two agenda items be:

a. COMSUBLANT's position/policy regarding future MK 48 exercise firings and firing areas.

b. COMSUBLANT's position regarding PMO's present plan for initial fleet introduction of MK 48-0 (Westinghouse version) in Charleston and MK 48-1 (Clevite version) in Norfolk (about 30 "token" units in each area in DEC 71).

The above subjects and associated considerations are discussed in detail in enclosure (1), paragraphs 5 and 3.d. respectively.

6. It is further recommended that the Staff Working Group's task include submission of viable proposals concerning the above and that official positions be subsequently provided to CNO and PMO (NAVORDSYSCOM) concerning these matters.

Very respectfully,

J. White

J. White
LCDR, USN

Copy to:
N1, N3, N4, N6
N7, N31, N32, N40, N43

ENCLOSURE (1)

N622 MARK 48 PROGRAM STAFF REVIEW

1. The MK 48 and associated support areas are reviewed below, for staff consideration and expansion. Items covered are grouped into four general categories; hardware, training, exercise firing policy and post firing analysis. A further breakdown by subject areas follows in paragraph 2. Each subject is discussed in detail in paragraphs 3., 4. and 5.

2. Mark 48 Program Areas of Interest

a. Hardware requirements:

(1) Torpedoes

(2) Retrievers

(3) Targets

(4) MK 48 shore facilities/Tenders

(5) Loading equipment

(6) Submarine handling equipment

(7) Submarine MK 48 Fire Control System Conversions

(8) Firing Doctrine

b. Training Requirements:

(1) Torpedo/Target Training, general

(2) Retriever Crew Training

(3) Shore facility and Tender crew training

(a) Torpedo

(b) Target

(4) Submarine Crew Training/Instructor Training

(a) Basic familiarization (FAM)

1. Torpedo/Target

2. Loading/Handling

3. Fire Control

4. Safety

24 APR 1971

ENCLOSURE (1) to N622's MEMO of

(b) Individual and special training.

1. FT for Fire Control Maintenance (NEC)

2. Equipment Operator Training (i.e. F/C)

3. TM loading and handling

4. Firing doctrine for F/C parties

5. Team training

c. Exercise Firing Policy.

d. Post firing analysis and data employment.

3. Discussion by subject.

a. MK 48 Torpedo

(1) Current and projected status:

(a) CNO has directed that the MK 48 torpedo Mods 0 and 2 (Westinghouse) and Mod 1 (Clevite) will be evaluated during the same time span to complete by 1 July 1971. At that time either Mod 1 or 2 will be selected, a contract signed and fleet delivery will begin 17 months subsequent (about FEB 73) under current plan). This 17 month period includes 3 months of proofing for each weapon, on the NTS Keyport Washington range.

(b) Delivery to the fleet will be at a rate of units per year for 5 years, then units per year.

(c) The following token buys are programed to take place for fleet introduction in DEC 71, contracts are to be signed in June 1970:

1. MK 48 Mod 0. 88 main assemblies will be purchased; subsequent to proofing the Submarine Force will receive about 52 of these, with 48 warheads/warshot tanks and 41 exercise sections/tanks. About 60 percent of these totals will go to COMSUBLANT, 40 percent to COMSUBPAC (These percentages apply to all interim and final buys).

2. MK 48 Mod 1. It is reported that about "50 units" will be delivered to the Submarine Force about DEC 71. Information on MK 48-1 is limited.

3. The above numbers will be subject to funds allocated.

(d) PMO (Project Managers Office, NAVORDSYSCOM) feels the MK 48-0 torpedo's technical problems are now minimal. COMOPTEVFOR cites the following technical problems as unsolved at this time:

1. Fuel compartment expulsion bladder tends to rip.

2. Acoustic panel alignment not yet completely satisfactory. Weapon tends to pursue in wake if it approaches aft of beam, vice attack MOT, per design.

3. Shaft seal leakage experienced.

4. Some internal weld failures experienced.

(e) At this time the MK 48-0 TECH/OP EVAL is continuing at AUTEC range. Mod 1 evaluation will begin this Fall, by January 1971 Mods 0, 1 and 2 will be simultaneously under evaluation. The following schedule is forecast:

APR 70	Continue MK 48-0 TECH/OP EVAL
MAY 70	Commence MK 48-1 TECH EVAL at Keyport, Wash.
OCT 70	Commence MK 48-1 TECH EVAL at AUTEC
FEB 71	Begin MK 48-2 TECH EVAL
MAR 71	Complete MK 48-0 TECH/OP EVALS
MAY 71	Begin MK 48-2 OP EVAL
MAY 71	Complete MK 48-1 TECH EVAL
JUN 71	Complete MK 48-2 TECH OP/EVAL
JUL 71	Choose MK 48-2 or MK 48-1

NOTE: MK 48-1 OPEV schedule is not available at this time.

(f) Turn around time for both MK 48-0/2 and MK 48-1 is reported as days, with predictions that after experience is gained:

1. MK 48-0/2 turnaround could be extended, to a possible days.

2. MK 48-1 turnaround could be extended, to a possible months.

(g) Many tests have been run on stowing MK 48-0 in flooded tubes; while the feasibility is reported to exist no action appears to be currently underway to turn research findings into a projected goal. Both torpedo and tubes would require modifications (at an estimated maximum cost of $8,000 per tube).

(2) Considerations:

(a) "Unofficially", neither COMOPTEVFOR nor PMO seem to believe that MK 48 Mod 1 can be evaluated by JUL 71, without "lowering the statistical confidence level". Slippage of TECH EVAL commencement at AUTEC until JAN 71 is considered a possibility. PMO also suggested that both Mod 1 and 2 operational evaluations could in fact run as late as DEC 71, with the possible effect of moving delivery date of the selected weapon to MAY 1973 vice DEC 72.

(b) The MK 48-0 (Westinghouse) is limited to a pound warhead. Its successor, the MK 48-2 (Westinghouse), will be a dual purpose (ASW/Anti-Surface Ship) weapon, with an estimated pound explosive capability, attained by exploding the pound warhead and remaining OTTO fuel, with a special detonator. The MK 48 Mod 1 (Clevite version) is competing with the 48-2 and advertises, as its selling points: the acoustic "Comb Filter", which improves active homing , a more efficient OTTO fuel engine , with greater range, smaller fuel requirement and larger warhead (pounds of PBXW or pounds of H-6). The 48-1 has no plan to explode OTTO fuel, but this feature would probably increase yield to excess of pounds TNT. It is noted that new facilities must consider safety requirements for these high yields.

(c) USS PARGO (SSN650) and USS JACK (SSN605) with Fire Control Systems MK 113 Mod 6 are presently tasked to support TECH/OP evaluation of all MK 48 versions. PARGO's pre ROH upkeep is scheduled for JUL 70, JACK's pre ROH upkeep is scheduled for DEC 70. SUBLANT has recommended a replacement SSN 594 be substituted for JACK, it is felt that early approval and selection is warrented for the following reasons: what has happened in mo.? EW

1. COMOPTEVFOR states that seven months lead time are required to procure hardware and install in a replacement SSN. Immediate selection will provide minimum lead time necessary to ready the third ship for JACK's commitments by DEC 70. Work required is installation and interfacing of DDAS (degital data aquisition system), "softening" modification of torpedo handling equipment (i.e. plastic rollers on skids, etc.) and alteration to utilize modified SUBROC loader for 48 torpedo loading.

2. Failure to designate a third ship, could, if the JUL 71 MK 48 evaluation completion date slips, as has been suggested, leave both PARGO and JACK facing overhaul, without relief.

(3) Proposal: That a third SSN, either 637 or 594 class be designated and committed as soon as possible to replace JACK.

b. Retrievers.

(1) Current and projected status:

(a) At present there is no existing retriever that can satisfactorily handle the MK 48 torpedo (under other than ideal sea and wind conditions).

(b) In APR 69 PMO (Project Managers Office) was tasked by CNO to propose a program to obtain a retriever capable of recovering MK 48 torpedoes and MK 27 targets. In NOV 69 COMSUBLANT reaffirmed this requirement. No proposal has been issued to date. The minimum requirements provided PMO were:

1. Open ocean capability.

2. Ability to remain on station 2 weeks.

3. Stowage space for 8 torpedoes and 8 targets.

4. Ability to launch MK 27 target.

5. Ability to recover Target and Torpedoes with safety to personnel and hardware.

6. Equipped with precise position recovery equipment

(c) CNO (OP-95), during NOV 69 MK 48 Coordination Group Meeting, proposed using ASR's for open ocean retrievers.

(d) To date the following status of retriever development is known; AUTEC operations have determined:

1. Retrievers under 70 feet are useless.

2. Retrievers over 70 feet are of marginal value up to sea state three conditions.

3. The IX-306, an AKL prototype fitted with an articulated arm, is reported to require great expertise in sea states above 2. Its open ocean suitability has not yet been determined; however, unofficial reports tend toward pessimism.

(e) Controlling factors in retriever design are:

1. The weapon, which is very sensitive to physical mishandling (i.e. a .0020 inch scratch or dent within 14 inches of the nose is reported to adversely affect acoustic performance.

2. Weapon weight (about 4,000 pounds) combined with its verticle nose up flotation, with about 18 inches of nose exposed has proved to make the weapon suseptible to damage and dangerous to retrievers.

3. Wave height and wind velosity will be prime factors to be overcome in the design of any ocean going retriever.

(2) Considerations:

(a) Conversation with OPTEVFOR revealed that civilian construction company helocopter retrieving was contracted by Westinghouse, during tests at NTS Keyport, with good results. Development Prototype Torpedoes (DPT's) were retrieved up to sea state 4 successfully and quickly, without damage. The helo used a specially designed inverted cone, which was lowered by cable over the bobbing torpedo. When in position a mechanical trip caused the torpedo to be gripped around the nose; the torpedoes weight acted to hold it securely, while the unit was hauled to the helo. It is reported that the helo could hold 2 torpedoes internally as well.

(b) Without open sea retrieving capability, firing will be limited to AUTEC or a similar range. (see enclosure (1), paragraph 5.)

(c) Resolution of the retriever problem will require in part:

1. A proposed design (now tasked to PMO).

2. Funding

3. Construction/Conversion

4. Crew training

(d) Introduction without a 48 designed retriever will require, in summary:

1. Ranges

2. Some retrieving vehicle, with crew(s)

3. Review of firing constraints imposed

4. Decisions on range logistics, such as retriever and weapons positioning and support.

(3) Proposal:

(a) That PMO be requested to release the status (if any) of retriever design proposals. (Proposed letter drafted by N622)

(b) That the subject of retrievers be an agenda item for the MK 48 Staff Working Group and that the following, in part, be considered:

1. Requirements for commencing fleet introduction of MK 48 without a new retriever and limitations.

2. Helo retrieving as a possibly preferable alternative for future at sea firings.

c. Targets.

(1) Current and projected status:

(a) OPTEVFOR reports that the following deficiencies still exist in the target; solution is anticipated by Fall 70:

1. The proximity system, which causes end of run shut down when MK 48 torpedo range is 10 feet, does not function properly.

2. Combination mode, which causes the MK 27 to transmit a constant submarine signiture for passive 48 homing and simultaneously respond actively to 48 pings, does not function properly.

(b) Twenty-one targets have been ordered and will be delivered for completion of MK 48 TECH/OP evaluation. COMOPTEVFOR states that all these units are expected to be expended or worn out during the evaluation, none of these units can be planned on for fleet introduction.

(c) PMO reports that due to funding limitations no MK 27 targets will be procured for fleet introduction in DEC 71. Lead time for MK 27 procurement, subsequent to a contract, is 14 months.

(d) The following MK 27 delivery schedule was provided by PMO:

JUL 72 Begin MK 27 delivery to fleet (about 2 per month)

JAN 74 (about) Increase delivery rate to about 2.5 per month.

Total delivery will be 107 targets.

(e) The maximum acceptable loss rate set by COMOPTEVFOR for TECH/OP evaluations is 4 percent of total assets per year. Actual figure will be determined during TECH/OP EVAL.

(2) Considerations:

(a) It must be assumed that the MK 27 target will not be ready for initial fleet introduction DEC 71. Possible alternative targets are:

1. Surface ships

2. Surfaced submarines (at this time this in not authorized by PMO). Impact information related to this matter has been formally requested by COMSUBDEVGRU TWO, with COMSUBLANT endorsement. This study is now underway.

3. MK 17 stationary target. This type target is lowered by winch from a small ship and functions as either an active or passive target for the MK 48 torpedo. It is being extensively employed during TECH/OP evaluation at AUTEC/Keyport.

(b) The launch vehicle for mobile target MK 27 must be determined, as well as employment doctrine. The MK 27 is designed for launch from a 21" torpedo tube; there are advantages to the concept of retriever launched targets (precludes launching own target or employing a 2nd submarine). Retrieving the target is also a major consideration; a conventional retriever could do this.

(3) Proposals:

(a) That official correspondence be initiated to PMO citing the fact that exercise firings, subsequent to MK 48 introduction in DEC 71 will require MK 27 targets if optimum experience is to be gained. It is suggested that a minimum of four (4) targets be requested (4 on each coast) for initial introduction. This would permit the assignment of two targets, per turnaround facility, for fleet introduction DEC 71 (enclosure (1), paragraph 3.d.(1)(d) refers).

(b) That planning for fleet introduction without initial benefit of the MK 27 target be an agenda item for the Staff Working Group. The following should be determined:

1. Advantages/limitations of using surface ship targets?

2. The results of the study proposed by COMSUBDEVGRU TWO to Chief of Naval Material in JAN 70 to determine the MK 48 impact effect on submarine hulls and the feasibility of using a submarine as a target?

3. Advantages/limitations of using the MK 17 target?

4. The degree of training degradation suffered or benefits gained by placing heavy training emphasis on utilization of the MK 22 Weapons simulator, installed on all 48 configured submarines, vice actual weapon firings? The simulator is designed to provide the ability to conduct a complete attack problem exercising every phase of the attack situation except physical launch. Perhaps training benefits derived from actual firings would be secondary to firing weapons primarily under controlled conditions to seek performance information for optimum employment.

d. MK 48 Shore facilities/Tenders.

(1) Current and projected status:

(a) The following are the projected completion dates of MK 48 facilities and subsequent dates when the torpedo lines will be installed:

FACILITY	BUILDING COMPLETION DATE	INITIAL LINES & INSTALLATION DATE OF EACH	TOTAL BY 197
* Charleston	OCT 70	ONE - DEC ONE - APR	3
* Norfolk	APR 70	ONE - DEC ONE - JUL	3
SUBASE NLON	FEB 72	TWO - SEP	6(9)
* SUBASE PEARL	JUL 70 (exercise only)	ONE - JAN ONE - OCT	3
* NAD OAHU	JUL 70 (warshot only)	ONE - JAN ONE - JUL	4
* SUBASE SDIEGO	JUL 70	ONE - JAN ONE - JUL	3
Keyport	COMPLETE	FOUR - (Now) SEVEN - JAN (Production Proofing Station)	11

NAD GUAM	JAN 73	ONE - JUN	2
NOF YOKOSUKA	JAN 74	ONE - JUL	2

* Facilities now designated for Fleet Introduction by PMO.

(b) The following are the projected completion dates of MK 48 SHIPALT installations on tenders (spaces and foundations, etc.) and subsequent dates when torpedo lines will be installed:

TENDER	SHIPALT 875 COMPLETED	INITIAL LINES AND INSTALLATION DATE OF EACH	TOTAL BY 19
* AS11 NLON	1971	ONE - JAN	1
AS12 SDIEGO	?	ONE - AUG	1
AS16 KWEST	Complete	ONE - AUG	1
AS19 (FBM Tender)	?	ONE - JUL	2
AS 31 (FBM Tender)	Complete	ONE - JAN	2
AS32 (FBM Tender)	Complete	ONE - JAN	2
AS33 (FBM Tender)	JUN 70	ONE - JAN	2
AS34 (FBM Tender)	Complete	ONE - JAN	2
AS36 NORVA	Complete	ONE - NOV ONE - JAN	2
AS37 SDIEGO	On Delivery	ONE - OCT ONE - NOV	2
AS18 CHASN	Complete	?	1

* NOTE: (1) AS11 Class will receive only 1 torpedo line, all others receive 2 lines.

(2) NAVSHIPS recently proposed only partial completion of AS33 MK 48 spaces to divert funds to other work. COMSUBLANT concurred, based on NAVSHIP's statement that AS33 2 line requirements could be provided during next overhaul. NAVSHIP's final decision remains undertermined at this time.

(c) The projected MK 27 target line delivery scheduly is not firm. PMO provided the following tentative list of lines to be installed, with no date:

Facility/Tender	Number of Lines
CHASN	ONE
NORVA	ONE
NLON	TWO
PEARL	TWO
OAHU	ZERO
SDIEGO	ONE
GUAM	ONE
YOKOSUKA	ONE
KEYPORT	TWO (proofing)
Tenders	
AS-11 Class	NONE
AS-31, 32, 33, 34 Class	ONE
AS-36, 37 Class	ONE
ORLANDO	TWO

At present the following target lines exist:

KEYPORT	THREE (OP/TECH EVAL AND PROOFING)
ORLANDO	ONE (TRAINING)
CAPE KENNEDY	TWO (OP/TECH EVAL)
NUWRES	ONE (TECH EVAL)

PMO indicated that 34 target lines will be delivered by 19 , but dates and locations were not available. It is presumed that a target line will be delivered to each facility supporting fleet introduction of the MK 48 torpedo.

(d) Informal communications from PMO-NAVORDSYSCOM stated that PMO at this time is formulating plans for delivery of fleet introduction torpedoes in DEC 71 and has tentatively selected the Charleston facility to introduce the MK 48-0 (about 30 units) and the Norfolk facility to introduce the MK 48-1. The basis for choosing these two sites is that they are the only two East coast facilities that will be completed in DEC 71. These facilities will be expected to handle both exercise and warshot units. The Charleston facility will be ready, but as it now stands the Norfolk facility will be an exercise facility only.

The history leading up to this situation was provided by N622 MEMOs of 12 FEB 70 and 13 MAR 70. Briefly, in 1966 it appears that an exercise torpedo facility, only, was envisioned outside of the Submarine Force. In February 1967 COMSUBLANT officially requested conversion of the NORVA facility to a warshot capability. (At that time we recommended Yorktown as a less desirable alternative); our request was based primarily on the arguement that a two line tender, could not adequately meet the projected turnaround requirements of Submarine Squadron SIX. As a result of COMSUBLANT's request the present site was examined and formally approved to handle a maximum of 1000 pounds high explosive, if barricades were constructed. In March 1969 COMNAVORDSYSCOM, by letter, increased the explosive handling requirements, for all facilities, from pounds per line to pounds per line. It is assumed that this was based on the fact that the MK 48-2 will have an estimated pounds of high explosive yield (enclosure (1), paragraph 3.a.(2) refers). The Norfolk building is now essentially completed, but without a barricade and without any hardware (torpedo lines). In January 1970 CINCLANTFLT requested that Atlantic Division of NAVFACOM proceed with planning for conversion to a warshot facility. COMSUBLANT, by letter, provided LANTFLTNAVFACOM with the new pound per line explosive requirements and requested that the capability of the NORVA facility be re-evaluated and that information on the maximum attainable capacity, with barricading, be supplied. This request was passed to COMFIVE for review, as cognizant area coordinator. Commandant FIFTH Naval District's letter reply stated in effect:

1. pounds high explosive is the maximum capability attainable in the NORVA facility.

2. That movement of a single torpedo with pound yield from the facility to the piers would be in violation of safety requirements. (By telephone COMFIVE Ordnance Office stated that present torpedoes (i.e. MK 16-8) are handled one at a time on piers with a waiver).

3. That no satisfactory alternative site existed on the Naval Station.

4. That Yorktown is the logical alternative and that C.O. Yorktown is directed to coordinate development proposals on one or more sites for submission, with recommendations, to the Ammunition and Hazardous Material Handling Board, scheduled to convene in NORVA JUL 70. It is understood that Yorktown will respond favorably and that COMFIVE will then solicite COMSUBLANT's Intentions.

(e) Torpedo and target day turnaround capability, based on a 5 day work week, 8 hour shifts and no down time is estimated as follows:

UNIT	TIME/UNIT	UNITS/QTR/LINE
MK 48 Warshot	8 hr	
MK 48 Exercise	16 hr	
MK 27 Target	8 hr	

30 Additional minutes per "FIR" item requiring replacement.

(f) Based on numbers of submarines per port, PMO estimates greatest turnaround requirement after 1973 will exist in New London.

(g) In January 1972, when "selected" weapon delivery begins, PMO planning calls for simultaneous delivery of new "lines" (until that time only existing TECH/OP EVAL lines will be in use). The first "new" lines will go to NTS Keyport proofing range and Orlando, to support training. This will, as explained to me, result in a reduction of lines, from two to one, in NORVA and CHARLESTON, for a period of about 2 to 4 months, because only one half of the existing lines will be compatible with the selected weapon Mod. The plan being that, either CHASN or NORVA would give the other one of its two lines to permit continued operation in both facilities.

(2) Considerations:

(a) NORVA's ability to handle warshots must be resolved. Based on day turnaround the present alternatives appear to be:

1. Formally request a waiver to increase the existing facilities explosive handling capability (The general opinion in COMFIVE Ordnance Office is that no significant waiver would be granted because of the population density).

2. Barricade the present facility and attain a pound capability (which would ultimately not be sufficient to handle even one MK 48-2 with a pound yield, if selected).

3. Review feasibility of a Yorktown facility for warshots (funding and time will be major considerations). SUBPAC presently is constructing an "exercise only" facility in Pearl Harbor, with a separate warshot facility at NAD OAHU.

4. For fleet introduction, review feasibility of installing one of NORVA's two lines in L. Y. SPEAR (AS-36) to handle warshots.

(b) If MK 48-1 is ultimately selected, NORVA would, as a pound facility, have a one line capability for warshots, permitting turnaround of about such units per quarter, based on day turnaround. This would meet initial introduction requirements (about units) for the 48-1. One line would help support, but not by itself meet MK 48-1 projected needs beyond introduction. For example, the nine SSNs presently homeported in NORVA, if carrying assumed "BRAVO" loads of units per 637 and per 594 class, would require turnaround of about units per quarter.

(c) AS-36, scheduled for homeport in NORVA, could eventually provide two additional lines (when in port) and increase warshot turnaround capability by units, providing a Tender/facility total capability of units per quarter; however, based on the presently advertised delivery rate I estimate that by 1977 a possible units per quarter could require turnaround in NORVA.

(d) Some thought has been given to introducing both the MK 48-0 and MK 48-1 in CHASN. In opposition to this it is noted that the MK 48-0 and MK 48-1 are essentially different weapons. They do about the same thing, but the internal hardware is not the same. Internal components, test equipment and turnaround lines are not interchangable. It therefore is not feasible to consider handling both the 48-0 and 48-1 in the same facility. Some of the problems would be in PMO's judgement:

1. Normal facility manning for introduction is 14 men. Because Mod 0 and 1 training is different, manning would have to be double. Mutual interference potential would be great.

2. Logistic problems are different. Mutual interference potential here would also be great.

3. It is reported that the facilities physical space would probably be inadequate for four introduction lines (CHASN ultimately is programed for only THREE lines).

(e) COMSUBLANT's agreement or recommendations concerning PMO's plan to position and introduce about MK 48-0's and MK 48-1's in the CHASN and NORVA facilities, has been unofficially solicited. The range of choices appears to be:

1. MK 48-0 in CHASN and MK 48-1 in NORVA. (PMO's current plan). To do this would require either:

a. Barricading NORVA for pounds explosive, or

b. Placing one warshot line on L.Y.SPEAR.

2. MK 48-1 CHASN and MK 48-0 NORVA (same requirements as a. above).

3. Both 48-1 and 0 in CHASN. This is not considered feasible (see para. (d) above).

(3) Proposal:

(a) That the MK 48 Staff Working Group take the following as high priority agenda items:

1. How MK 48 warshots will be handled in NORVA?

2. Concurrence or non concurrence with PMO's plan to introduce MK 48-0 in CHASN and MK 48-1 in NORVA, and recommendations.

(b) That official decisions be made on the above items and promulgated, as required.

e. Loading Equipments:

(1) Current and projected status:

(a) A converted SUBROC loader has been tested on both SSN 594 and 637 class submarines; it appears to be promising for these classes. It has not been tested on other classes. This loader is being presently evaluated in Cape Kennedy during TECH/OP EVAL.

(b) Use of a crane is reported to be feasible, but great care must be exercised to prevent torpedo damage. The availability of crains with 4000 pound capacity is limited and their employment must be proofed.

(c) The concept of loading and stowing of MK 48 torpedoes in plastic "PODS" has been evaluated on board the 594 and 637 class submarines (POLLACK and BERGALL, JAN 70). This shows some promise as a means to protect the torpedo; however, the large pods (containing the guidance wire) would not fit in POLLACK. The small POD (without wire) did fit. PODs have not been tested on other classes. Research continues in this area.

(d) Standard loading equipment does not afford sufficient protection against torpedo damage.

(2) Considerations:

(a) The converted SUBROC loader may not be feasible for all submarines (i.e. the 598 class FBM loading hatch is far forward and suseptible to water entry. The combined weight of the load and torpedo may be prohibitive.)

(b) At this time the impression is that considerable work must be done in the area of loading to achieve acceptable standards for our submarines and acquire the necessary hardware; prior to fleet introduction, each ships loading capabilities and deficiencies must be examined. It is suspected that problems will be encountered, based on experience to date.

(3) Proposal: That the Staff Working Group make loading equipments an agenda item for discussion.

f. Submarine onboard Handling Equipment.

(1) Current and projected status:

(a) All submarines handling the MK 48 torpedo must have loading equipments "softened" to prevent torpedo damage. NAVSHIPS has been tasked to develope applicable SHIPALTS.

(b) If POD loading is determined to be feasible some SHIPALTs will also be required. This became apparent on BERGALL and POLLACK.

(2) Consideration:

(a) That class SHIPALT requirements be determined in adequate time to permit planning and installation in ships participating in fleet introduction.

(3) Proposal:

(a) That the above be an agenda item for the MK 48 Staff Working Group.

g. Submarine MK 48 Fire Control System Conversions.

(1) Current and projected status:

(a) The following fire control systems have received the MK 48-0 conversion in SUBLANT:

TYPE SYSTEM	NO. WITH 48 CAPABILITY
MK 113 (SSNs)	16
MK 113 (SSBNs)	3
MK 112	0
MK 101 (TRIGGER)	1
MK 106	2

(b) The following numbers of fire control systems in SUBLANT will have the MK 48-0 conversion by DEC 71:

TYPE SYSTEM	NO. WITH 48 CAPABILITY
MK 113 (SSNs)	25
MK 113 (SSBNs)	12
MK 112	2
MK 101	2
MK 106	6*

* (See paragraph (d) below)

(c) The MK 48-0 fire control conversion to MK 113, MK 112, MK 101 and MK 106 F/C systems is progressing on schedule; however, to make these ship's F/C systems compatible with MK 48-2 and MK 48-1 torpedoes a still further ORDALT is required. It is reported that F/C systems with MK 48-0 capability will require a 40 percent change to the present 48-0 functions. The prototype kit for this conversion is being developed by Librascope. The first kit will be available 11 May 70. The two TECH/OP evaluation SSNs and ships introducing MK 48-1 will require this ORDALT. The former will have one half of their MK 113 systems configured for MK 48-0 and the other for MK 48-1 and 2 in order to provide services for forthcoming simultaneous TECH/OP evaluation of all MK 48 Mods. A recent engineering material casualty in USS PARGO, during TECH evaluation of MK 48-0 at AUTEC, will now cause her to be available for possible installation of the MK 48-1/2 ORDALT on 11 May. COMOPTEVFOR is considering the feasibility at this time.

(d) Recent inquiries from CNO indicate that future MK 48 installations on GUPPY III Submarines may be postponed indefinitely. Message communications between Philadelphia Naval Shipyard and CNO, regarding diesels programed for overhaul, seem to confirm this.

(e) It was recently learned that the MK 48 equipments and functions now installed on submarine fire control systems are no longer tested during WSAT.

This situation has existed since October 1969. The basis for this tact by NUWRES was reported to be to save money, justification being that the MK 48 torpedo is not available. A verbal objection was filed with MASWSP on 5 March 70 by both COMSUBLANT/COMSUBPAC representatives during the ASW Test Program meeting in Washington; this was recorded in the minutes. Our position was that MK 48 F/C WSAT is mandatory to ensure crew interest, familiarization and to preclude equipment degradation.

(f) Conversation with Naval Ordnance System Command Support Office Atlantic (NAVORDSYSUPPOLANT) has disclosed the fact that ships receiving the MK 48-0 F/C conversion are reporting to the fleet with inadequate spare parts support. Typical problems are:

1. MK 48 capability spares purchased by NAVORD and automatically shipped, are not loaded onboard and are left in an unopened condition in the shipyard. ?

2. APLs prepared to support certain ORDALTs and/or equipment identified with the MK 48 conversion do not reflect the intended NAVORD support posture, hence, items not identified are off loaded as excess.

NAVORDSUPPOLANT has assisted at least two known ships during conversion thus precluding the above; however, it seems apparent that a continuing problem does exist.

(g) Current plans do not include a WSAT MK 48 torpedo turnaround facility in Roosevelt Roads for the ST CROIX range. This proposal was formally submitted by COMNAVAIRSYSCOM in JUN 67 to CNO, no further action manifested. AUTEC range is also being considered as a possible WSAT range, but the turnaround site at Cape Kennedy will be disbanded subsequent to completion of TECH/OP EVAL. It appears that WSAT MK 48 torpedoes will be issued by home port CONUS facilities.

(2) Considerations:

(a) The projected availability of kits for installation of the second generation ORDALT to MK 48-0 configured systems (for 48-1/2 capability) must be determined, in order to plan for installation in the ships supporting the MK 48-1 introduction in DEC 71.

(b) The arguements for not installing MK 48-0 conversions in GUPPY III diesels are:

1. Cost versus benefits derived. GUPPY III diesels will probably be close to or deactivated prior to delivery of their MK 48 torpedoes.

2. It is also reported that physical problems, yet unaddressed, exist such as space available and inadequate 400 cycle power to support MK 48 plus other ship's systems simultaneously.

(c) The MK 48 fire control equipments and functions must receive WSAT or suffer degredation and attendant problems in the future. Symptoms of such problems exist at this time. Meetings with and inquiries solicited from NAVORDSYSUPPOLANT indicate:

1. Equipment presently installed is, in general, not receiving adequate preventative maintenance.

2. Ships receiving this equipment apparently are not adequately indoctrinated regarding spare part problems associated with the conversion.

(d) Preparation of weapons for WSAT and designation MK 48 WSAT ranges (i.e. AUTEC?) requires study in preparation for MK 48 F/C system grooming for introduction and beyond.

(3) Proposals:

(a) That the following be agenda items for the MK 48 Staff Working Group:

1. Availability dates and installation time required for the 2nd generation ORDALT converting MK 48-0 F/C systems to a MK 48-1/2 capability.

2. Preparation of MK 48 weapons for WSAT, WSAT range availability and WSAT requirements for ships participating in introduction.

(b) That COMSUBLANT Supply contact NAVORDSYSUPPOLANT Supply (Mr. H. Glockenspiel TEL: 397-6531) to review deficiencies associated with MK 48 fire control system conversions and that the alleged need for forces afloat indoctrination be ascertained, for possible follow up action. NAVORDSYSUPPOLANT has collected considerable supply data on both the 48 F/C systems and the weapon, that could be of great value.

(c) That official correspondence be forwarded to NAVORDSYSCOM to reinstitute MK 48 WSAT checks (N622 will prepare a letter).

h. Firing Doctrine.

(1) Current and projected status:

(a) COMSUBDEVGRU TWO has completed and forwarded a proposed firing doctrine for the MK 48-0 torpedo for COMSUBLANT Staff review; this is in progress. This doctrine will be employed and undergo review during operational evaluation of the MK 48-0. In addition COMSUBDEVGRU TWO is prepared to update this doctrine to cover MK 48-1 and MK 48-2. COMSUBDEVGRU TWO has requested early staff review of the MK 48-0 doctrine to permit evaluation on range as soon as possible.

(2) Considerations.

(a) Optimum employment of the MK 48 torpedo will require the firing ship to program the weapon for the prevailing sound velocity conditions. This means the fire control team must mentally see and understand the ray path envelope in at least depth and range and convert same to weapons settings (pitch,

running depth, etc.). With the sound velocity trace in hand, the usual method is to manually extract required data from tables or graphs. Needed are the best ballances of simplicity and accuracy necessary to obtain an acceptable sound velocity profile (in excess of 2500 feet) and convert same to a visual display of the ray path envelope.

(b) Two devices have undergone some degree of testing; the XBT and a simple ray path device which converts the sound velocity readings to a depth/range cathode ray tube visual presentation of the ray path envelope. The submarine's sonar transducer can be inserted for any depth and the related ray paths are immediately apparent. While all variables are not considered this equipment does provide a very functional picture. Conversation with DEVGRU TWO and OPTEVFOR indicates that this gear has potential; more work is required, but it appears to present an acceptably accurate picture. In January 1970 ORL (Ordnance Research Lab) Penn State University made a presentation to selected staff members emphasizing the need for such equipment. Graphs and tables regardless of their accuracy do not lend themselves to facility and accuracy in the hands of the average sonarman or officer performing under stress.

(3) Proposal:

(a) That the necessity for development and employment of the XBT/ray path tracer or similar equipment for use with the MK 48 system, be an agenda item for the MK 48 Staff Working Group.

4. Training. Training is to a great extent dependent on hardware availability and "up-to-dateness"; at this time training is hardware limited. The training requirements for the MK 48-0 are outlined in the "Technical Development Plan (TDP) W23-06 for Torpedo MK 48 Weapons System". A new TDP is in development for the combined MK 48-0/1 and 2; it will be published in July 70 according to PMO. Based on best information the following training picture exists:

a. Torpedoes and Target Training.

(1) Current and projected status:

(a) About 95 TMs have been trained by Westinghouse and/or Orlando AUW school in the MK 48-0 torpedo and target. Orlando training was suspended in JAN 70 (because of excess personnel and no weapon), pending selection of torpedo Mod in JUL 71. The MK 48-0/MK 27 target course length is:

1.	MK 48-0 maintenance Target MK 27 maintenance and test equipment	44 weeks
2.	MK 48-0 and MK 27 assembly	20 weeks
	TOTAL	64 weeks

(b) MK 48-2. No training has been or is being conducted. It is reported that MK 48-0 trained men (para (a) above) will require approximately six additional weeks of training for updating and assignment to MK 48-0 billets,

additional training requirements for 48-2 is not known.

(c) MK 48-1. No training to date. Clevite factory training is programed for 20 of the 95 MK 48-0 trainees above and was to begin 18 MAY 70. It is, however, now reported that delays have occurred due to non-delivery of MK 48-1 test equipment; the new school date is 27 JUL 70.

(2) Projected training expected to be available:

(a) MK 48 (Mod selected) and Target (maintenance, assembly and test equipment):

Orlando AUW School

(Training was planned at SDIEGO FASW School.PMO states that this has been cancelled)

(b) Familiarization and operation, MK 48 torpedo and MK 27 target:

Orlando AUW School
CHASN FBMSTC
New London SUBSCOL
NORVA FTC
Pearl Harbor FSTF
SDIEGO FASW School? (disposition not known)

b. Retriever Training.

(1) None projected.

(2) Considerations:

(a) A means to retrieve both weapon and target must be defined, to permit training.

(b) Present AUTEC retrievers are not manned by Navy crews.

(c) The only known Navy retrieving experience is at NTS Keyport.

(3) Proposal: That retriever requirements and associated training be a MK 48 Working Group agenda item.

c. MK 48 Shore Facility and Tender Personnel Training:

(1) Personnel manning these billets will receive the training delineated in paragraph 4.a.(1) above.

(2) Personnel that will man the MK 48 facilities for fleet introduction will supposedly be ordered in 3 months in advance of introduction date. Manning requirements for each facility are:

5 TM per MK 48 line
3 TM per MK 27 line
1 TMC Supervisor
1 O in C
15 Total

d. Submarine Crew Training.

(1) Current and projected status:

(a) Submarine crew training for MK 48 evaluation has, to date, been "on the job" in all areas, with the exception of fire control, which is presently available for certain NEC qualifications, for MK 48-0 configured F/C systems, in the following locations:

School	F/C Systems
SUBSCOL	MK 113
	MK 112
	MK 101
	MK 106
DAM NECK, VA.	MK 113
FSTF Pearl Harbor	MK 113
FBMTC CHASN	MK 113

(2) Familiarization (FAM). It is understood that FAM training will ultimately be provided in short courses at some of the above facilities. Submarine school has, for example, made plans to provide the following instruction, based on the selected weapon:

Torpedoman's Course - 2 weeks
Fire Control Course for MK 112 and MK 113 Systems - 8 weeks
SOIC (5 week Course) - 1 hr presentation (Officers Intermediate Course)
SOAC (6 month Course) - 20 hrs classroom, lab and attack center training (Officers Advanced Course)
SOBC (6 month Course) - 2 hr presentation (Officers Basic Course)
PCO/PXO Training
Weapons Officer Package Course - 2 weeks
Command Level Hardware and Tactical Employment Course - 1 week
Appropriate Refresher Training in hardware and employment of Weapon for SSBNs, SSNs and Diesel Electric submarine.

(3) It is very necessary that certain fleet introduction training be provided for submarine crews. The following is felt to be minimum:

1. General officer and applicable enlisted FAM:

a. Torpedo/Target

b. Loading/Handling

c. Fire Control

d. General Safety

2. Individual training for applicable officers and enlisted personnel is:

a. F/C Maintenance

b. F/C Operation

c. Loading and Handling

d. Firing Doctrine (including ray path affect, equipment and employment)

3. Fire Control Party Team Training.

5. Exercise Firing Policy.

a. Current and projected status:

(1) In June 1969 and again in November 1969 COMSUBLANT went on record, during the MK 48 coordination group meetings in Washington, D.C. as advocating unrestricted open ocean firing of the MK 48 torpedo. I believe at this time that position should be reviewed. The following facts and considerations all tend to support the concept of firing only on a range:

(a) No open ocean retrieving vehicle exists and none has been proposed by PMO, as directed by CNO (para 3.b. refers).

(b) Security must be provided to protect both weapon and target during firings. The following is required:

1. Ability to pin point locations and to guarantee recovery or determine unit to be beyond salvage.

2. Ability to ensure limited access to range firing area.

(c) High cost of weapon and target and limited assets require the same recovery assurances as paragraph (b) 1. above, plus:

1. Assurance that recovery is without damage to the weapon.

2. A firing plan that restricts losses to under 5 % of total inventory projected to the end of each fiscal year. This figure has been set by CNO and NAVORDSYSCOM.

(2) PMO's planning calls for two exercise firings per quarter for SSNs and one per quarter for SSBN/SS submarines. PMO's planned load out priorities for fleet introduction and subsequent call for loading SSNs first then SSBNs and SSs, as assets permit.

b. Considerations:

(1) If the MK 48 torpedo is confined to range firing:

(a) AUTEC is the only range now used for the MK 48. Competition for that range will be considerable. Other commands will require range time. Type training could be affected.

(b) If other ranges are selected, which ones will they be? Existing ranges? New ranges? Could SUBROC ranges be utilized?

(2) If MK 48s are fired in the open ocean, where and can requirements of paragraph 5.a.(1)(b) above be met? Should open ocean firing be limited to special requirements (i.e. under ice), when we weigh all factors and risks?

(3) How will our introduction submarines be loaded out? For example, if 30 MK 48-0 torpedoes are positioned for introduction in CHASN will one or possibly two SSNs be loaded with only MK 48s, off loading other weapons, or will several ships be required to mix load (with attendant problems)? Will our interest be in providing maximum dispersion of the weapon to provide as many units as possible with immediate capability or will emphasis be placed on limited distribution, with prime interest in learning how to use the weapon? Do we want a combination of both? ?

c. Proposals:

(1) That COMSUBLANT Exercise Firing Policy be a high priority agenda item for the MK 48 Staff Working Group. Discussion should include: agree! EN

(a) Pro and Con of Range Firing

(b) Pro and Con of Open Ocean Firing

(c) Frequency of exercise firings desired/required

(d) Load out priorities

(2) That results of paragraph (1) be converted to an official position concerning employment of the MK 48 torpedo during introduction and beyond.

6. Post Firing Analysis and Data Employment.

a. Current and projected status:

(1) The MK 48 is sophisticated in design, its logic is complex and post run data analysis will be a comprehensive undertaking, beyond any past experience.

(2) At present one master data bank exists, at . All post run torpedo/target/ship data must be analysed there. Subsequent to TECH/OP EVAL the master bank and computer will be located at . That will be the only one on this coast available for fleet introduction and perhaps beyond. The data bank is building a base of information on the MK 48, during TECH/OP EVAL, which will be continued at . Post firing read outs will be forwarded from to operational commands.

(3) "Quick Look" equipment will be incorporated in turnaround shops (MK 48 facilities) which will permit graphic printout of only six of the fifty parameters recorded by the torpedoes Digital Data recording system. The post run analysis value of the quick look equipment is reported to be limited.

b. Consideration: Interpretation of post run readouts will probably be tedious, time consuming and perhaps complicated. It well may be that new approaches will be required, such as special team(s) or center(s), to ensure optimum interpretation and utilization of post run data in the development of tactics and firing doctrine and to improve weapon performance.

c. Proposal: That post run data analysis and its employment be an agenda item assigned the MK 48 Torpedo Working Group for the purpose of determining projected requirements and the organization necessary to derive maximum benefits.

DEPARTMENT OF THE NAVY
COMMANDER SUBMARINE FORCE
U. S. ATLANTIC FLEET
NORFOLK, VA. 23511

IN REPLY REFER TO:

STAFF MEMORANDUM

From: Chief of Staff
To: All Staff Officers

Subj: Mark 48 Torpedo Working Group; re-establishment of

Ref: (a) Chief of Staff Memorandum of 22 DEC 66

Encl: (1) TWO Agenda Items

1. The Staff "Mark 48 Torpedo Working Group" was initially established in December 1966, by reference (a). Because of significant program slippage Group meetings were suspended indefinitely.

2. Introduction of the Mark 48 Torpedo Weapon System into SUBLANT units requires re-establishment of the Mark 48 Torpedo Working Group to keep fully appraised of all aspects of this program, to provide timely response to the varied requests made by participating organizations, and to insure coordinated and consistent positions are generated by the Staff.

3. Commander W.E. Greene, N62, is hereby appointed as Chairman of the Staff Working Group. Deputy and Assistant Chiefs of Staff shall re-appoint suitable officer representatives to the Working Group. The Group will meet on call of the Chairman, review current status of Mark 48 Weapon System problems affecting the Force, and generate proposals for action which will be forwarded via customary review channels. Agenda items will be prepared by individual members of the Working Group and forwarded to all members prior to meetings. The Chairman will keep a record of the meetings, follow-up on action items, and submit reports to me.

4. Enclosure (1) is attached showing desired format for agenda items.

J. P. Jones

Enclosure (2) to N622
Memorandum of 24 APR 1970

MK-48 TORPEDO FLEET INTRODUCTION (D)

By mid May, Jim was considering another visit to the Project Manager's Office (PMO) to hold further discussions with and exchange information with Harold Progress. These mutual exchanges were beginning to prove themselves valuable assists to both Jim and Harold in the routine performance of their respective jobs. So facilitating were these exchanges that they mutually agreed to meet at least monthly in either Norfolk or Washington. Between meetings they stayed in touch by telephone -- lots of information and newly broached questions were handled that way. However, the sheer volume and the security classification of much of the new and changing information that they found it necessary to discuss basically forced the requirement for their face-to-face exchanges.

Although, by this time, Jim found himself getting more and more involved in all aspects of the MK-48 Program's status and progress, he very definitely began to develop a particularly keen interest in those areas where COMSUBLANT[1]

---

[1] For clarification of the acronyms used throughout the case, please refer to Appendix I.

This case was written by CDR David A. Newcomb and LCDR Robert F. Hurley, Jr., under the direction of Professors William Giauque and Michael Dean of the Naval Postgraduate School, Monterey, California. All names have been disguised.

Cases are prepared as a basis for class discussion and are not designed to present illustrations of either correct or incorrect handling of administrative problems.

could and should exert an effort toward preparing for fleet introduction. For some unexplained reason however, at the CAPT Ready level on the staff, there seemed to be a strong interest, almost a preoccupation in Jim's opinion, in the MK-48 torpedo itself. They wanted to know things like how many torpedoes were fired during MK-48 evaluation firings by PARGO on the AUTEC range and what the torpedo hardware problems were. Jim considered things like this "nice to know", especially if they afforded some insight into the dependability of projected torpedo delivery schedules, but he certainly didn't feel that they deserved the focus that they were getting. "We can't do anything to help in this area even if we wanted to;" thought Jim, "things like this are clearly the Project Manager's (PM) problems." It seemed to Jim that things like getting submarines, their crews, and support facilities ready were the kinds of things that COMSUBLANT should be worrying about. But, somehow things didn't work out that way. In fact, CDR Greene had been asked to provide CAPT Ready with a summary of weekly torpedo firing results every Friday, and Jim was tasked to get the required information. He had worked it out with the COMOPTEVFOR staff, and the required information, appropriately "edited" to protect the competetive selection process, was made available every Friday. Jim never overcame the feeling that it was a near useless exercise and an aggravating, cost ineffective use of his time. He felt his time could be better spent preparing for fleet introduction of the MK-48 Torpedo

Weapons System (TWS) as a system, rather than just a torpedo, over which he had no control.

One of the reasons why Jim found it advisable to visit Harold Progress was that he was anxious to pursue in greater depth the conversion of integral submarine hardware to MK-48 configuration. The major items involved were submarine torpedo loading and handling equipment and submarine fire control systems. Although both torpedo handling and fire control hardware were fundamental to a submarine's purpose, Jim surprisingly discovered that little was known by COMSUBLANT Material Office (N-4)[2] personnel regarding the scope of configuration changes to be made to these systems. As a result, Jim usually became uneasy when he started thinking about these two areas. He had visited codes N-402, N-405, and N-403, SSN, SSBN, and SS Material Officers respectively, in an effort to find out what they and their shops knew about MK-48. It didn't take him long to find out that they knew "damn little". CDR Swain (N-403) had made his position rather clear earlier, and further discussion, under more relaxed circumstances, in early April, revealed that his shop also knew little or nothing about work being done in the MK-48 area.

A recent statement made by LCDR Spalt, the assistant to N-405, the SSBN Material Officer, in response to Jim's PMO visit preparation inquiries pretty well summed up the

---

[2] For this COMSUBLANT Staff Office and all others encountered, refer to exhibit (8) to determine organizational relationships.

situation. Jim had asked how the N-405 shop, acting for COMSUBLANT, handled MK-48 work being accomplished on SSBN's: Specifically how such ordnance equipment work packages were reviewed prior to commencement of shipyard overhauls.

"Well," replied LCDR Spalt, "as you know, we go to the SSBN pre-overhaul planning conferences after having reviewed all proposed work items. ORDALTS[3] to be accomplished by the shipyard are listed in an ORDALT work package forwarded to us by NAVORDSYSCOM. They are the ones who fund the ORDALT work. We just check the package against other work to ensure that we have no conflicts. We haven't gotten any inputs from your office, pro or con, about these ORDALT packages. We don't review the technical aspects of ORDALTS, and, unless there is some obvious glich, we just 'rubber stamp' the package for completion with other overhaul work items. The 616 and 627 class SSBN's, for instance, were all approved for MK-48 fire control ORDALT installations during overhaul, and I expect all 640 class SSBN's to get MK-48 fire control ORDALT packages installed during their upcoming POSEIDON conversion overhauls. As a matter of interest, last fall, I think in September 1969, we received some correspondence from NAVSHIPSYSCOM that revealed plans to have us, 'Forces Afloat', do some kind of alteration to the torpedo loading and handling systems on our 608 and 616 class SSBN's. We sent out a letter to NAVSHIPSYSCOM asking them to define the scope of work involved, but we never received an answer."

---

[3] See Appendix II for explanation of ORDALT Program.

LCDR Spalt's comments both surprized and disturbed Jim. He was unaware that submarine MK-48 conversion information of such detail, particularly in ORDALT form, was available to the staff. And, given that such information was available, combined with the vested interest COMSUBLANT should have in such work, he somehow felt that such work deserved a more detailed review than it seemed to be getting: at least as much as the other work items were getting by the N-40 shops.

Jim later discussed this conversation with Chief Sharp, and the Chief indicated that it appeared to him that they, the N-62 shop, had, to this point in time, never been given an opportunity to review ORDALT work packages before the pre-overhaul planning conferences. In fact, Chief Sharp ended that discussion with Jim by saying, "Mr. White, this whole ORDALT area, not just MK-48 related ORDALTS, appears to be totally screwed up. I'm getting a lot of information together and trying to make heads and tails out of what's going on. I've already asked the Chiefs in the N-40 shops to forward all ORDALT package information and correspondence they receive to us for a chop in the future. As soon as I know enough about what's going on to discuss it sensibly, I'll bring you up to speed, Sir."

Chief Sharp's comments supported Jim's impressions and, to Jim's way of thinking, highlighted the need for someone on the staff to get more involved in the ORDALT program. They, the N-62 shop, were the most likely candidates for such involvement, but, before they could tackle such a venture, they needed to know more about the program.

Jim tried to fill his ORDALT knowledge deficiency by reviewing the appropriate sections of his MK-48 files and by discussing the subject with other staff members. Neither of these ventures proved too rewarding. As a result, Jim decided to take the matter up with Harold Progress during their upcoming visit. He realized that this wasn't specifically a MK-48 problem, but it did affect the MK-48 Program, and tackling the problem at the MK-48 level was as good a place as any to start. "Who knows?" thought Jim, "Maybe I can kill two birds with one stone."

When Jim arrived in Harold Progress's office on 22 May, he was prepared, as usual, to address all MK-48 subject areas, but he was particularly interested in those areas that would affect fleet introduction. Accordingly, he attempted to vector the exchange toward that direction. And, when the dialogue in Harold Progress's office finally reached the subject of submarine MK-48 configuration and how the ORDALT process affected submarine conversion, Jim discussed his concerns regarding what had to be done and why it had to be done to get the submarines ready to handle and fire MK-48 torpedoes. He started by quickly reviewing impressions derived from a pre-trip re-reading of the MK-48 Program Coordination Group (PCG) minutes for the 9th and 10th meetings held on 20 November 1968 and 16 April 1969 respectively. Briefly, he recalled that during those meetings Harold Progress had first (on 20 November 1968) broached the fact that there were "torpedo/ship interface problems" that resulted

in incompatabilities between submarine torpedo handling gear and the MK-48 torpedoes. For example, the hard dolly and torpedo tube rollers were making point contacts with the thin torpedo skin. This caused scraping and scuffing of the torpedo skin. As a result, Harold Progress noted that submarines scheduled to participate in the torpedo evaluation program would be modified "to improve their loading and handling characteristics". At the 10th meeting he had elaborated further saying that torpedo skin abrasions caused certain torpedo acoustic interference problems. He addressed the fact that submarine torpedo loading systems fell into three basic design categories: nose first, tail first, and vertical loading. Corrective options ranged from use of a "pod" to encapsulate the torpedo while loading it, to the use of a phenolic coating, or some other suitable coating, on all metal objects that came into contact with the torpedo. He had concluded his presentation to the MK-48 PCG by stating that the problem required urgent attention.

"Harold," said Jim, "I've read a lot about the loading and handling problems, but I'm not sure I understand all that I should about them. The term 'softening' keeps cropping up, and I have a vague idea what it means. But, it sounds like a 'buzz word' that covers a myriad of things. No matter how I look at it, it appears as if several modifications are going to have to be performed on our submarines, and that I ought to be deeply involved. I'd like to know more about this 'softening business'."

But, before giving Harold Progress an opportunity to respond to his loading and handling query, Jim launched into the MK-48 fire control conversion efforts and quickly addressed several areas of concern. He began by expressing his frustration over the fact that projected conversions required for submarine fire control systems seemed rather nebulous. On top of the "SPEC change ORDALT"[4] that had to be performed on the existing MK-48-0 fire control installations once the ORDALT kits were eventually made available, Jim revealed the staggering content of a 20 May telephone call he received from NUSC, Newport. NUSC, Newport wanted COMSUBLANT to schedule 21 different submarines, by hull number, for a total of about 4000 man hours of fire control work that they referred to as "MK-48 Field Engineering Changes" (FEC's). As far as Jim and Chief Sharp could determine, FEC's were essentially ORDALTS, but they were not being administered with the normal NAVORDSYSCOM ORDALT system. However, their accomplishment was necessary for the fire control systems to become MK-48 compatible.

"Harold," confessed Jim, "We at COMSUBLANT don't even have a handle on the ORDALT program, and now they're hitting us with these FEC's, which we know absolutely nothing about. Our shop is presently getting formally involved in the ORDALT loop, so anything you can tell me about either,

---

[4] The "SPEC change ORDALT" was an ORDALT which changed the basic MK-48-0 configures fire control systems to MK-48-1/2 dual purpose capability.

especially in terms of how both impact on the MK-48 Program, will certainly be appreciated." Another fire control related matter that puzzled Jim was the fact that NAVORDSYSCOM was no longer funding the testing of MK-48 fire control equipment along with other submarine fire control equipment during Weapons System Accuracy Trials (WSAT) following submarine shipyard overhauls. Thirdly, Jim disclosed the fact that some of the submarines that were receiving MK-48 fire control conversions did not appear to be receiving adequate spare part support, and, in some cases, the spare parts allowance lists had been noted to be inadequate. Lastly, Jim expressed concern that the submarines that had received MK-48 fire control conversions, to data, didn't seem to be concerned or motivated to maintain this new equipment. He really wasn't sure why he should bother Harold with the last item. It clearly sounded like a submarine force problem, but, for some reason, Jim felt that the PMO should be as concerned about it as he was. "Harold," Jim concluded, "precisely what is being done, and what will be required to be done in our submarines in order for them to handle and shoot the MK-48 torpedo? I'm really not sure I know."

"Well," began Harold, "let's take your questions in order and start with the loading and handling problems. The background on the 'softening SHIPALT'[5] is rather interesting."

---

[5] See Appendix III for explanation of the SHIPALT program.

And, with that, Harold Progress proceeded to bring Jim up to speed. His comments were illuminating. It seems that any system which interfaced with the torpedo was subject to an "overnight" design change requirement because of some newly discovered incompatability with the torpedo. An example of this was the loading and handling problem. Who would ever have thought that submarine loading and handling equipment would be incompatible with the torpedo? Apparently, no one did in the early days. As Harold Progress related:

> "We learned a lot of things once we started exercising development torpedoes. The handling problem first developed back in 1967 -- they were having problems with experimental launchings. Corrosion was a major problem before a design change that isolated the ground circuit from the skin of the torpedo. As an example, once we were forced to keep a torpedo in a flooded torpedo tube for two hours because of bad weather which prevented our launching it. When we finally took the torpedo out of the tube, we'd discovered that electrolysis had eaten a hole through the shell of the torpedo. The electrical design change helped, but the corrosion problem wasn't completely solved. We ran some tests up at NUSC, Newport, and, after various alternatives were considered, we ultimately decided to coat the torpedo with a special laminar paint. This provided good protection, but we had to exert a concerted effort to prevent scratches because any exposed metal was extremely susceptible to corrosion. It soon became apparent that traditional methods and equipment used to load and handle torpedoes in submarines were not going to preclude marring the torpedo's protective coating. I observed a MK-48 torpedo being experimentally loaded on-board the USS JACK in Portsmouth, New Hampshire. The crew was permitted to align the torpedo and move it as they would any other existing torpedo. Well, they 'mule hauled' it and used crowbars and rubber mallets just like they did to any other torpedo, and, when they finally pulled it back out of the torpedo tube, it had scrapes and gashes all over it. While there, I also noticed that the torpedo rested on steel rollers while in the submarine's torpedo stowage cradles. This resulted in point contacts with the torpedo skin. Armed

with this new found information, I returned to the Project Office and revealed to all concerned that we were going to have to do something to 'soften' the submarine loading and handling equipment to prevent unacceptible corrosion damage. No one believed me, so I went to ORL, Penn State, our technical advisor, with the problem. I also went to VITRO to have them develop some interface drawings in an effort to pin point all of the interface problem areas. As it turned out, corrosion wasn't the only problem resulting from scratches on the torpedo skin. Scratches near the torpedo nose had a deleterious effect on acoustic performance. This accelerated the need for corrective action, so we went to NAVSHIPSYSCOM to seek their assistance in developing some kind of 'softening' plan. They weren't very interested, but the SSBN people had some money and asked me to come up to Electric Boat[6] in Groton and discuss what could be done right away to get the necessary work accomplished in SSBN's while they were in overhaul. I went, and there we reviewed the VITRO interface drawings in detail and came up with a 'softening' plan which we incorporated into the plans for overhaul of the 616 class SSBN's. That's basically where the 'softening' effort began. Essentially what we did was coat all the handling gear that came into contact with the torpedo with polyurethane and replaced or coated metal rollers with nylon. For 637 class SSN's like PARGO we did basically the same thing for both loading and handling equipment. We got NAVSEC involved in the problem in 1968, and in September of the same year we established a 'MK-48 Torpedo Weapons System Interface Coordination Team' to look at all possible torpedo/submarine interface problems. There were about twelve commands and agencies at the PM's level involved. Right now, NAVSEC and NAVSHIPSYSCOM are fully involved in the loading and handling business to develop SHIPALT plans for each class of submarine to ensure that their respective equipments are made compatible. PARGO presently, as you probably already know, has a prototype installation that enables her to properly handle all versions of MK-48 torpedoes for evaluation firings. Obviously, this expense wasn't programmed into the original MK-48 Program budget, and the initial cost estimates to install these alterations in all submarines approached the astronomical total of about sixty million dollars.

---

[6] Electric Boat is a submarine shipyard located in Groton, Connecticut, owned by General Dynamics.

That, of course, was prohibitive. We've had to come up with some money for SHIPALTS, but we are going to have to find ways to keep the cost down. We hope to have the proposed SHIPALT plan for the 637 class SSN's in hand very shortly."

"Holy wow!" exclaimed Jim, sitting back in his chair, "I don't know what I thought 'soften' meant when I first heard it had to be done, but it certainly looks like shipyard work will be required for all submarines. Given that's the case, how in the Hell are we ever going to be able to schedule such an effort during the middle of submarine operating cycles? At least two thirds of the submarines of this force won't be going into overhaul prior to MK-48 fleet introduction."

He didn't really get any answer. All Harold said was, "That's one of the big problems facing us right now."

After some more dialogue on the loading and handling problem, Jim suggested that they shift the discussion over to the fire control problems.

Harold agreed. "That's one area," he began, "where we've been doing extremely well. In fact, as far as I know, the fire control system has been keeping pace nicely with all of the torpedo design changes. I'll have to look into these specific problems that you have just brought up and get back to you with my findings. Regarding ORDALTS however," continued Harold, "I'm sure you recognize that ORDALT is an acronym for Ordnance Alteration, a formal change or modification to a NAVORDSYSCOM sponsored piece of equipment. And, like any formal change handled by a bureaucracy, the process

of getting one approved and distributed is painfully slow. This is why we are using FEC's. They are nothing more than ORDALTS that haven't made it through the formal NAVORDSYSCOM ORDALT approval loop. Don't get frightened though, we've got a good handle on the FEC's."

Despite Harold's efforts to console Jim's FEC worries, Jim was suspicious. "By-passing any formal system often introduced attendant problems that usually cropped up much later on," thought Jim to himself. "Besides that," he thought, "If I haven't got a handle on the 'painfully slow' ORDALT program, how in the Hell am I ever going to be able to stay on top of this 'expedient' FEC program." He decided to defer commenting however, at least until he was able to discuss the problem more intelligently.

Harold continued, "I certainly wasn't aware that there were any hardware support problems, but I'll look into it. I don't see any difficulty in getting the required alterations installed, as long as we can maintain a satisfactory installation schedule. I'll look into all of these problems you have mentioned and take them up with our fire control people. If you work on the availability and scheduling of submarines for installation of these ORDALTS and FEC's back at COMSUBLANT, I'm sure that will be a big help. Another thing you can do for us at COMSUBLANT is to start thinking about nominating another 'dedicated' submarine to supplement PARGO. That requirement is going to come up soon. Do you at COMSUBLANT have one in mind?"

Jim had no answer for this question, but he had been forewarned of this requirement some months back when he started a dialogue with the MK-48 types on COMOPTEVFOR staff.

As the meeting was winding down, Harold used a "sea story" to illustrate how the "softening" requirement took everyone by surprise and how ill prepared they were prepared to cope with it. Harold began,

> "Jim, don't leave until I tell you this -- it really shows how 'bush league' our original "softening' efforts were. Back when I initially discovered the 'storage tray roller point contact problem', I thought about it overnight, and, before I flew back to Washington, I told one of the on scene engineering types that the obvious way to temporarily solve the problem was to coat the rollers with a rubber or soft plastic. He agreed, and I left.
>
> The next day I get a frantic phone call from this fellow, and he tells me, 'I did everything you said, but now we can't get the torpedo into the tube -- the top of the torpedo nose hits the top edge of the tube.'
>
> 'Well,' I said suspiciously, 'Tell me exactly what you did.'
>
> 'Just what you told me, Harry -- I removed the rollers from the storage trays and took them over to the Rubber and Plastic Shop and had them coated; then I reinstalled them.'
>
> I than asked him how thick the coating was, and he told me. 'Well,' I asked, 'did you remove that much metal from the rollers before you had them coated?' I don't have to tell you what his answer was."

That broke up their meeting, and Jim left Harold's office doubled over in laughter.

The message Jim carried back to Norfolk was loud and clear to him -- COMSUBLANT had better start worrying about submarine MK-48 hardware configuration as a number one priority. The potential scheduling requirements for the still pending MK-48 loading and handling SHIPALTS and the burgeoning

MK-48 fire control ORDALT/FEC requirements looked ominous at best, requiring additional marching orders from the PM before Jim could effectively do anything for him. The lack of such orders didn't keep Jim from worrying about these problems however. All of this was in addition to the routine problems he romanced on a daily basis. Jim returned to his pursuit of these matters with renewed vigor.

By mid July, the N-62 shop was really beginning to feel the added weight of MK-48 Program involvement. The "MK-48 Program Staff Review" had raised a number of points requiring followup investigation and various degrees of action. In addition, Jim's interest and involvement in the MK-48 area had now made his name available to various people in the MK-48 business: NUSC, Newport, COMOPTEVFOR, the PMO, NOSSO-LANT and COMSUSDEVGRU TWO, to name a few. As a result, he was getting more and more telephone calls from people needing fleet input for their area of endeavor. Chief Sharp was experiencing the same thing in the fire control area. It seemed that once people found out that there was someone to talk to, they discovered that they wanted to talk. Mentally reviewing all that had happened, hadn't happened, and was about to happen since he distributed the "MK-48 Program Staff Review", Jim concluded that the review was a milestone event. It was the juncture where he broke out of his cocoon and began to gain sort of a tacit "Mister MK-48" image on the staff. Jim recalled,

> "Yes, it was about mid July. I was in the office early one Saturday morning -- it was my

turn to guard the store and answer the telephone. After I finished reading the morning message traffic and determined that there was nothing 'hot', I put my feet up on my desk and began to think over where we had been since April, and where we were headed. The time really had flown by, and, on the surface, it didn't seem like much had happened. But, when I considered things in the aggregate, some very significant things came to mind. For one thing, I managed to crank out three major COMSUBLANT position letters: two to the PMO, and one to the CNO. The first, written in May, addressed anticipated requirements to support fleet exercise firing of the MK-48 torpedo. Specifically, the letter pointed out the need for suitable torpedo retrieving craft and noted that the projected procurement of MK-27 Mobile Torpedo Targets (MTT's) appeared inadequate in number. The letter also requested the current status and future plans for these procurements. The second letter, written in June, provided the PMO with COMSUBLANT's preferred order of MK-48 shore facility workshop activations. It requested that only production torpedoes manufactured by the eventual winner of the competetive selection process he distributed to the fleet, to eliminate the problem of configuration management, and it further requested that facility activation dates be commensurate with the need to support the first production torpedo deliveries. And, if, for some reason, the latter request could not be met, the letter went on to request that the initially delivered torpedoes be supported from the MK-48 Test and Evaluation Support Facility at Complex 30 in Cape Kennedy (Port Canaveral), until the permanent facilities in New London, Norfolk, and Charleston could be activated in an orderly and well organized manner. The third letter went to the CNO on 2 July. It pointed out the fact that the Norfolk facility could not be activated as a warshot workshop facility because of insurmountable population safety constraints that had manifested when the torpedo's warhead yield had increased as a result of the new dual purpose configuration. The letter recommended that the facility be used to support exercise torpedoes only, and that a new warshot workshop facility, capable of supporting the Norfolk area, be established at the Naval Weapons Station in Yorktown, Virginia. The irony was that virtually all of the staffing required to get these letters out had come from the N-62 shop. We had gotten the other necessary staff inputs by first visiting the potentially interested staff officers and still later by holding an ad hoc staff committee

meeting in June. We still hadn't re-established our 'MK-48 Torpedo Working Group' yet. In fact, we didn't get the Chief of Staff's memo which re-established it signed out until 23 July. It goes without saying that we burned up a lot of energy in the N-62 shop getting these letters out.

"And, we had also been getting ourselves more and more involved in the scheduling of ORDALTS and FEC's for installation in our submarines. Here-to-fore, ORDALTS and FEC's had been getting installed on a 'catch as catch can' basis. Chief Sharp and I had done a lot of talking to our Submarines Squadron Weapons Officers[7] as well as NUSC, Newport and NOSSOLANT, the NAVORDSYSCOM field activities that had actually been installing our ORDALTS. Prior to this dialogue, ORDALTS had simply been installed whenever the field engineers could find a submarine along side somewhere, and could get aboard it. We were now trying to do some organized scheduling. Chief Sharp had figured out that our submarines were literally thousands of man hours behind in ORDALT accomplishments. At this point in time, we were very actively utilizing the field services of NOSSOLANT. They had experts available to help people like us. CDR Greene had encouraged the N-62 shop to utilize their services when he first came aboard in 1969. We had finally taken the que, and, working through parent Submarine Squadron Commanders, we were using NOSSOLANT teams to board and inspect our submarines. They performed a service that they called a Weapons System Review (WSR). They would literally open up equipment to verify which ORDALTS were actually installed and ensure that all the records, theirs, ours, the submarine's, NAVORDSYSCOM's, and NAVSUPSYSCOM's, matched the physical installation. Once the ORDALTS were verified, they would review the submarine's supply system records and spare parts stocks to ensure that they supported the physical installation. If they didn't, they took the steps necessary to formally correct all problems through the Naval Supply System. The finished product of a WSR was that everyone who needed to know, not just the submarine, knew where the submarine stood in the world of ORDALT accomplishment, and the submarine in question was able to fully support its physical installation. Needless to say, COMSUBLANT and all of our submarines, should have been doing this all along. We weren't, and it goes without

---

[7] For this and all further reference to Submarine Squadrons, Flotillas, or Divisions, refer to Exhibit (13) to determine organizational relationships.

saying that we needed something like the WSR service to help us straighten out our screwed up ordnance configuration records. Although the WSR effort was in its neophyte stages at this time, the information gathered thus far showed that Chief Sharp, who was now working very closely with NOSSOLANT, had certainly been correct with his prediction -- our ORDALT program in the Atlantic Submarine Force was a real bag of worms. What's more, we had to get a handle on the administrative controls before MK-48 became operational or the problems would multiply. Moreover, the FEC's, which were being installed by Singer Librascope field engineers, were separate efforts on top of all this.

"Unbeknownst to us for some time, Chief Sharp and I were on converging courses in the fire control business. It appeared that a lot of the configuration administration problems that he was struggling to identify were already at the source of the MK-48 firecontrol spare parts support problems we had begun to encounter.

"Then, I had also been under the gun ever since leaving Harold's office on 22 May to find another submarine to replace the USS JACK for the Technical/ Operational Evaluation effort at the AUTEC Range. The greatest pressure had come from the COMOPTEVFOR staff in Norfolk. As you know, they were tasked by CNO to supervise the technical evaluation of the two torpedoes. Their role was that of a third party -- an unbiased 'devil's advocate.' I had paid them quite a few visits, starting way back in January. Their MK-48 Program Officer, CDR Fritz, and I had developed a good relationship over the months. I still couldn't get used to their role in the MK-48 business. They were tasked by CNO to supervise and support the technical evaluation of the WESTINGHOUSE torpedo and all of the MK-48 ancilliary support equipment, which included fire control plus loading and handling equipment. All of this was under the technical direction of NUSC, Newport. The CLEVITE torpedo technical evaluation fell under the technical direction of NOL, White Oak. The full Operational evaluation of both torpedoes and all support equipmentwas to be conducted by COMOPTEVFOR. We, COMSUBLANT, provided the submarine platforms, but COMOPTEVFOR controlled the submarines during their assigned MK-48 evaluation exercises. This was a big departure from the traditional way of doing things. Rarely in the past has the submarine force ever relinquished operational control of its submarines. The real 'clincher' was the fact that COMOPTEVFOR's MK-48 Operational Plan prohibited submarine personnel, Commanding Officer included, from discussing the

results of their participation. Although the purpose of this prohibition was quite valid in that it attempted to protect the interests of the competing contractors and maintain the integrity of of the selection process, it proved quite frustrating to me and a lot of other people. We were denied that source of information. I was forced to get the best 'edited' dope available, and that came from CDR Fritz, who received a daily update on all range firings. In any case, CDR Fritz wanted a second 'dedicated' submarine 'on line', and he had actually been 'leaning' on me since March. He was convinced that conversion of the selected submarine could take as much as two months to complete. Accordingly, the intensity of his requests for a designated 'dedicated' submarine increased progressively since April. I, in turn, initially with my 'MK-48 Program Staff Review', attempted to 'lean' on the N-31 shop, our Operations and Scheduling people. They finally came up with a candidate and transmitted their recommendation to CNO for approval by the Program Sponsor. On 26 June, CNO responded by message approving the USS GRAYLING's nomination. CDR Fritz was pleased, the PMO was pleased, and N-31 and N-62 had the pressure taken off. However, for N-62 it was only a momentary relief.

"Since 26 June, a continuous volley of messages had been flying back and forth concerning the configuration changes necessary to get GRAYLING ready. She was currently in the Charleston Naval Shipyard (CHASN, NSY) finishing up a routine overhaul, and the PMO wanted to get people onboard 'ASAP' to get the MK-48 work started. Back on 5 June, well before GRAYLING was officially appointed, we had informally passed the word to all interested parties that GRAYLING was the most likely choice. The following day, the PMO was on the phone to CHASN, NSY, trying to get their ducks lined up to take on the additional work required in the MK-48 conversion area.

"So, one Hell of a lot had transpired since April. And, at that precise moment, my mind was focused clearly on the fact that the GRAYLING conversion was like right now, on deck, and it had to get prime attention. It was our most significant involvement to date. The TRIGGER MK-48 loading and handling conversion had recently been completed, and TRIGGER just left for the west coast as a result of her transfer to COMSUBPAC. Although I'd never really heard anything derrogatory about the conversion effort on TRIGGER, something said in a telephone conversation I had with the Submarine Squadron Four Weapons Officer, LCDR Bob Marlin, a week ago, lingered on my mind. In passing, Bob had said, 'CHASN,

NSY didn't know which end was up on TRIGGER.' He then added, 'I hope they have their homework done for GRAYLING.'"

Following his Saturday morning "soul searching exercise", Jim made it a point to monitor and interpret all messages and correspondence regarding GRAYLING much more carefully. And, he talked to Harold Progress on several occasions during the month of July. Harold had kept his ear to the ground, and all of the information that he was able to round up indicated that the GRAYLING conversion plan was well in hand. All agencies, commands, and contractors that were to be involved in the onboard work had been notified, and the PMO was apparently well satisfied with the groundwork that was being laid. In fact, the early June effort by the PMO to get things started while GRAYLING was still in the shipyard had paid off. NAVSHIPSYSCOM and CHASN, NSY had agreed to do certain preliminary MK-48 work, before GRAYLING completed her shipyard overhaul in August. The PMO had forwarded funds for the work to CHASN, NSY expeditiously on 25 June. NAVSHIPSYSCOM had officially authorized CHASN, NSY to start the work on 1 July. This was significant, since the MK-48 work represented a considerable amount of additional work to be accomplished in concert with an already full and tightly scheduled shipyard overhaul. The major portion of the MK-48 conversion effort was actually supposed to take place during an additionally scheduled, separate Technical Availability (TAV) which was to follow GRAYLING's overhaul. Hence, this advance MK-48 effort was most advantageous and gave all concerned an appreciable head start.

July was a month of anticipation and planning -- the big concern to Jim was the determination of what the controlling job was on GRAYLING and then the scheduling of other work accordingly. By 18 July, it had been established from incoming message traffic and telephone conversations with the PMO, NUSC, Newport, CHASN, NSY, and the Submarine Squadron Four Weapons Officer that the fire control work would be controlling. A NUSC, Newport message had asked COMSUBLANT for six weeks to accomplish the work, with at least three of those six weeks alongside a pier in Charleston. Jim had quickly contacted the N-31 people to secure a block of time for accomplishment of the fire control work, and, after touching base with the N-402 shop, SSN Material, he drafted a message to NUSC, Newport, NAVSHIPSYSCOM, the PMO, and COMSUBRON FOUR with information copies to all other interested addressees. The message made available five weeks, beginning 7 September, to accomplish all remaining work, it also made available a sixth week to check out the fire control system and the special instrumentation that was to be installed with the ORDALTS. The message tasked COMSUBRON FOUR with the coordination of the required work and sundry support needs on scene. It also authorized COMSUBRON FOUR to exercise direct liaison, as necessary, with the organizations performing the work. On the suggestion of N-402, CDR Standfast, the message recommended to NAVSHIPSYSCOM that the loading and handling SHIPALT "be fabricated now" to ensure that it could readily be installed during the same period that the

fire control ORDALTS were to be installed. A NAVSHIPSYSCOM message concurred with the prefabrication recommendation, and it enjoined CHASN, NSY to be able to complete all required installation work on GRAYLING during the first three weeks of the 7 September six week TAV.

Jim burned up the telephone wires during the first week in August, making certain that he had the total picture regarding what was to be done on GRAYLING. He had passed on everything that he was able to find out to Bob Marlin, in Charleston, and to GRAYLING's Division Commander, COMSUBDIV 42, CDR Auger.

In the midst of all this, on a morning when CDR Greene was out of the office, CDR Greene's phone began to ring. Jim answered it, and it was CAPT Ready on the other end. Jim explained that CDR Greene wasn't in and asked if there was anything that he could do.

"Yes," replied CAPT Ready, "It's you I want to talk to anyway. Get your ass over here right now."

"Yes, Sir!" replied Jim.

Jim hung up the phone, got in his car, and drove to headquarters.[8] Within a few moments, he was standing in front of CAPT Ready's desk.

As CAPT Ready looked up, he said, "I want you to get your tail on the next plane out of here and get down to the AUTEC

---

[8] COMSUBLANT headquarters was 4.5 miles away from the complex where Jim's office was located.

Range and square away PARGO's communications problems." As the dialogue progressed, it appeared that CAPT Ready received a frantic telephone call from PARGO's Squadron Commander reporting severe difficulties that PARGO was experiencing while trying to effectively communicate with the AUTEC Range control center personnel. Because the NUSC, Newport directed TECH/EVAL was presently underway, the experienced COMOPTEVFOR personnel that were usually manning the control center communications circuits were not there and had not been there for a few days. And, a couple of civilians inexperienced with submarine communications were filling in for them, but they neither understood nor appreciated the problems of a submarine. As a result, the submarine was often asked to do things which were extremely difficult or near impossible. The frustrations of the submarine personnel mounted, and the situation, in their opinion, occasionally reached chaotic proportions. PARGO's Squadron Commander was paying the ship a routine visit, observed all of this, and asked CAPT Ready to do something to correct the situation.

Although Jim fully understood the problem and truely sympathized with PARGO, he tried to remind CAPT Ready that it was really none of COMSUBLANT's business. "Captain," Jim began, "this really is none of our business. That ship is on loan down there to COMOPTEVFOR. They're supposed to have a guy down there controlling this operation."

"I don't see it that way," replied CAPT Ready. "They can't communicate. You get the Hell down there. We need a

Naval Officer down there. And, stay down there until you get the damned situation squared away."

"Yes, Sir!" replied Jim, as he left CAPT Ready's office.

Jim returned to his office and called CDR Fritz at COMOPTEVFOR. Jim related what had happened and what was evolving. "I recommend you, COMOPTEVFOR, stand up and say you're going to take charge down there," said Jim, "or, as you can see, I'm going to be forced to jump into the middle of your pond. And," continued Jim, "you're going to get upset, I'm sure, 'cause you don't want us in the middle of your pond."

"That's right!" responded CDR Fritz, and he began to quote a verse right out of COMOPTEVFOR's Operations Plan.

With that, Jim got a copy of the Operations Plan and took it over to headquarters to show CAPT Ready. Essentially what it said was: What goes on down here is nobody's business but CNO's, COMOPTEVFOR's, and the PM's. And, no one in the fleet or on the submarine is permitted to see anything, say anything, or do anything, because it is a very sensitive, competetive situation. Furthermore, we don't want anybody down here, and nobody's allowed down here, without the express permission of COMOPTEVFOR.

Jim showed this to CAPT Ready. CAPT Ready read the thing. He read it over again, and, when he finished, he looked up and asked, "What the Hell are they doing about it?"

"They're sending a man down there to handle the situation," responded Jim.

"OK!" replied CAPT Ready, making the problem disappear and closing another MK-48 episode which consumed a good portion of Jim's day.

On 6 August, it appeared that the stage was set, as Jim went over the GRAYLING plans with CDR Greene. Jim was confident that everything was "on track". CDR Greene was also satisfied but suggested that Jim go ahead and summarize the status of the GRAYLING conversion effort, in writing, for CAPT Ready, and that he use this document as the medium for promulgating the information to the rest of the concerned staff codes. Jim's memorandum summarized the situation as follows:

"1) USS GRAYLING (nominated to replace USS JACK for MK-48 TECH/OPEVAL services) is scheduled for active MK-48 Program participation in January 1971.

2) Alterations to GRAYLING, in addition to the MK-48-0 fire control conversion completed during the current shipyard overhaul, will include:

A) Installation of foundations and interface cabling for Digital Data Acquisition System (DDAS) instrumentation. This is now being accomplished by CHASN, NSY during GRAYLING's present overhaul, using long-lead time hardware removed from JACK during the period 19-21 June in New London.

B) Installation of a foundation for a modified SUBROC loader to be used to handle and load MK-48 torpedoes from topside into the torpedo room. This item is also now being accomplished by CHASN, NSY.

C) Installation and calibration of the DDAS instrumentation. This item will be accomplished by NUSC, Newport during a currently scheduled six week TAV in Charleston to begin on 7 September 1970.

D) Installation of a prototype 'SPEC Change ORDALT' which will convert one of GRAYLING's two Attack Directors to provide MK-48 MODS 1 & 2 (dual purpose weapons) capability. This item will also be accomplished by NUSC, Newport during the 7 September TAV.

E) Modification of the onboard loading and handling equipment (softening conversion) to ensure compatability with all mods of the MK-48 torpedo. This item will be accomplished by CHASN, NSY during the first three weeks of the 7 September TAV.

2) A modified WSAT has been arranged for GRAYLING during the period 23-28 October, which will be followed by a test firing of two MK-48 torpedoes at the AUTEC Range on 30 October.

3) Schedules are firm -- GRAYLING will be ready by 1 November. The remaining deficiency is crew training. ORD-4021, CAPT Surefoot, plans to visit GRAYLING in the near future to provide command guidance. NUSC, Newport will provide for crew familiarization during the TAV period."

Although August was an extremely busy month in the N-62 shop, and little time was available for "gilding the lily", Jim checked up on GRAYLING once more on 15 August to make sure everything was moving forward properly. In Jim's own words, "Things were moving along like clockwork."

At 0730 on 1 September, while Jim walked by CDR Greene's office door, enroute to his own desk, with a dozen problems on his mind, CDR Greene's voice rang out loud and clear. "Get your ass in here," he blurted. "Look at this God damned message," he continued, pushing it across his desk toward Jim.

Jim looked at the message. It was from GRAYLING to COMSUBLANT with information copies to everyone in the world who had an interest in GRAYLING's MK-48 conversion efforts. It read:

"MK-48 TORPEDO SUPPORT INSTALLATION

1. NEW AND/OR UNCLEAR WORK ITEMS ARE CONTINUALLY BEING POINTED OUT TO COMMANDING OFFICER CONCERNING INSTALLATION.

2. PREVIOUS CONFERENCE DID NOT FULLY DEFINE TOTAL WORK PACKAGE OR RESPONSIBILITIES.

3. TO ENSURE COMPLETION OF ALL REQUIRED WORK DURING PRESENT AVAILABILITY, RECOMMEND IMMEDIATE CONFERENCE TO CLEARLY DEFINE GOALS, REQUIREMENTS, AND RESPONSIBILITIES OF ALL INTERESTED PARTIES."

Jim fell into a chair. "Good Lord!" he exclaimed. "What in the Hell went wrong? I can't believe it. What in the Hell is going on down there?"

"You tell me," responded CDR Greene.

MK-48 TORPEDO FLEET INTRODUCTION (E)

It was not yet 0800. CDR Greene and Jim White were again in the former's office, attempting to hypothesize how the GRAYLING MK-48 conversion effort could have turned sour. It really wasn't clear just what could have prompted the ship's Commanding Officer to throw his hands up in the air and send such a message "blast" to "God and everybody". He was essentially censuring everyone from the Project Manager and COMSUBLANT[1] right on down the line.

The big hand wasn't on the hour yet when CDR Greene's phone rang. He picked it up, almost reflexively, right in the middle of one of his sentences. He was telling Jim that he was going to call Rocky Powers, the GRAYLING's skipper and get the "straight dope". There must have been a little E.S.P. drifting through the air; it was CDR Powers on the other end of the line. CDR Powers and CDR Greene went back a long way. In addition to their excellent acquaintanceship, neither had any hang ups about getting right down

---

[1] For clarification of the acronyms used throughout the case, please refer to Appendix I.

This case was written by CDR David A. Newcomb and LCDR Robert F. Hurley, Jr., under the direction of Professors William Giauque and Michael Dean of the Naval Postgraduate School, Monterey, California. All names have been disguised.

Cases are prepared as a basis for class discussion and are not designed to present illustrations of either correct or incorrect handling of administrative problems.

to the facts of a situation. CDR Greene cupped his hand over the receiver, and, while still listening to CDR Powers, whispered, "Jim, pick up the extension at your desk; I want you to listen to this."

The conversation lasted for about five minutes. CDR Powers said that he sent his message the evening before, and that he hoped he could get to CDR Greene to brief him "before there were any waves." The essence of his comments was that the pre-installation conference for both the fire control work and the Shipyard work, which he attended, "left a Hell of a lot to be desired." The first sign of difficulties was the conspicuous absence of someone in overall charge of the entire work effort. Despite the fact that the representatives from NUSC, Newport and Charleston Naval Shipyard (CHASN,NSY) were able to sufficiently outline the essentials of their respective responsibilities, more and more work items were popping out of the woodwork as the 7 September TAV start date neared. Also worrisome was the fact that these additional work items weren't being presented in the format of some kind of a documented change to a master plan. On the contrary, from CDR Powers' point of view, discovery of many of the work items that were new to him was coming about in bits and pieces through conversations with various people. He had gotten a little additional information from LCDR Bob Marlin, Submarine Squadron Four (COMSUBRON FOUR)[2]

---

[2] For this and all further reference to Submarine Squadrons, Flotillas, or Divisions, refer to Exhibit (13) to determine organizational relationship.

Weapons Officer, but CDR Powers was of the opinion that Bob Marlin was equally as exasperated as he was. He had also gotten some of his information from NUSC, Newport personnel over a cup of coffee in the wardroom, and from his own officers who had collected their "dope" from the various technicians that had been on and off the ship in connection with the MK-48 installation planning. He was both perplexed and annoyed by what he viewed as a potential "Tower of Bable operation." What added insult to injury was the fact that he, as commanding officer of the submarine, had somehow been committed to an unidentified amount of complex work without even the courtesy of being "cut in" on many items. And, the straw that finally broke the camel's back was the fact that, everything else not-with-standing, it appeared that no effort was being made to coordinate the work. Both Jim and CDR Greene could readily appreciate what they were being told. No commanding officer would stand by for such apparent disregard for his responsibilities and ultimate accountability. As the conversation progressed, it was agreed that a conference would be held in the GRAYLING's wardroom, in Charleston, the morning of 2 September, and that CDR Greene and Jim would be in attendance. CDR Powers then committed himself to touch base with COMSUBRON FOUR to ensure that all of the agencies that he could determine were involved would be asked to be represented. CDR Greene stated that he would "close the loop" at COMSUBLANT's end by telephoning all organizations known to be involved, to ensure that there were

"no loose ends." The conversation soon wound down on a cordial note. After hanging up the phone, CDR Greene told Jim to get them a couple of seats on the afternoon flight to Charleston, and he drove over to headquarters to calm the choppy waters which had been unmistakenly whipped up by the GRAYLING's message.

The next morning, at 1100, CDR Greene and Jim were seated at GRAYLING's wardroom table. The meeting was chaired by GRAYLING's Division Commander (COMSUBDIV 42), CDR Z.K. Auger. Other attendees were Commanding Officer GRAYLING -- CDR Powers, COMSUBRON FOUR Weapons Officer -- LCDR Marlin, NUSC, Newport representative -- Mr. T.S. Carde, Weapons Officer GRAYLING -- LT Call, and Charleston Naval Shipyard (CHASN,NSY) representative -- Mr. Lawson Riles, plus six unidentified people listening in. The discussion was being led by CDR Auger. He stated that the purpose of the meeting was to clearly define the goals and responsibilities of all interested parties, with the specific intent of precluding the unnecessary expenditure of more time and money at some later date. He emphasized the apparent need for the meeting by citing some existing problems, which clearly resulted from lack of unified communications and direction. Specific examples were: virtually no documentation had been provided to GRAYLING or COMSUBRON FOUR describing such things as materials required, work schedules or milestones, the total scope of the work, and the assignment of responsibilities; there was no indication of how the NUSC, Newport and CHASN, NSY

work was to be coordinated; and no effort had been made to conduct an adequate pre-installation ship check.[3] The latter omission was attested to by the fact that plans used for earlier work on USS PARGO were just then being changed to accommodate GRAYLING as a result of discovering that the configuration of the two ships was different.

CDR Auger went on to say that he'd been on the telephone with the MK-48-0/2 Project Manager (PM), CAPT Surefoot, and had been told that Mr. Carde was to be the general supervisor and coordinator for all work that had to be done. Mr. Carde didn't seem to be aware that he had that distinction, but he concurred with the need and accepted the responsibility. At this point, CDR Auger got into the business of trying to identify the work that had to be done. It was agreed that NUSC, Newport and CHASN, NSY work schedules had to be pinned down and coordinated. Following a prolonged discussion, which broached quite a few potential and real problems, the participants agreed to the following: Mr. Carde would develop a final integrated work schedule. COMSUBDIV 42, Commanding Officer GRAYLING, and COMSUBRON FOUR Weapons Officer would work together with CHASN, NSY planners and would put together a schedule that would be compatible with ship's force work requirements and concurrently serve as an input

---

[3] Ship check is a term used to describe the process of physically comparing a ship's installation with existing plans to ensure that the plans match the installation. It should be appreciated that ships of the same class are rarely built <u>exactly</u> alike.

for Mr. Carde's master schedule. COMSUBLANT would contact COMOPTEVFOR and discuss projected plans for GRAYLING. This would serve as the basis to initiate a message to all commands, major and minor, that were concerned with GRAYLING's MK-48 conversion. This message would redesignate COMSUBRON FOUR as "the primary point of contact regarding all matters concerning GRAYLING's MK-48 conversion and participation in the Technical/Operational Evaluation Program." The message would specifically state that all related communications should be directed to LCDR Marlin, COMSUBRON FOUR Weapons Officer, listing his telephone number, or, as an alternate point of contact, to CDR Auger, COMSUBDIV 42, also listing his telephone number. And, several other details were resolved.

CDR Auger stated that he would call CAPT Surefoot and appraise him of the results of the conference. CDR Greene requested that COMSUBRON FOUR provide weekly Situation Reports (SITREPS) to N-62 by telephone and a written work list as soon as it was compiled. The conference had identified about a dozen significant work items. However, the list was not exhaustive, so all in attendance agreed to exert independent concerted efforts to ensure that all work items were surfaced before the final list and the integrated work package were drawn up.

On the flight back to Norfolk that night, Jim and CDR Greene discussed the situation again. The greatest single message both had received from the current GRAYLING "flap"

was that there appeared to be a flagrant breakdown in communications and direction from activities sponsoring MK-48 conversion efforts to those commands actually receiving MK-48 support equipment, conversions, etc. The ironic thing about the whole mess had been that Jim had talked to all of the key planning offices just a few days before, and all of the responses were dripping with confidence and assurances that everything was on track. As a result, it just never occurred to Jim to ask everyone if they had worked up an integrated work package and cleared it with COMSUBRON FOUR and the GRAYLING's Commanding Officer. Jim mentioned this oversight to CDR Greene.

"For Christ's sake, Jim," responded CDR Greene, "who would ever have thought that, in a project as costly and complex as this, that we would have to spoon-feed people like the PM, NUSC, Newport, and CHASN, NSY directions regarding the need to plan and coordinate their work efforts in the field and to work through the cognizant commands while keeping them informed regarding what they are going to do. And," he continued, "there's probably a lot more of this going on that we don't even know about."

As unbelievable as it might seem, they decided that it might do them well if Jim would start looking into the kinds of similar things that might have happened within other SUBLANT commands who have had cause to interface with the MK-48 Program. They had never before received any formal bitches, but after this, they began to wonder if all was "peaches and cream".

Two major action items faced Jim when he returned to his office. First of all, he and CDR Greene had to put together the message that they'd committed themselves to at the conference. The other item was to look into the potential problems they'd discussed on the flight home. Both of these items required considerable additional dialogue with other commands, so Jim spent the next couple of days talking to various MK-48 involved commands. He talked with the Weapons Officers on the staffs of COMSUBDEVGRU TWO and COMSUBRON TEN, both in New London, and he rehashed the situation with the COMSUBRON FOUR staff in Charleston. There had been a number of routine services provided to support MK-48 system evaluations over the course of the past few months. Nothing terribly involved, but Jim probed to find out what the managerial relationships had been. The specific involvements had to do with arrangements for a SUBROC loader demonstration which was held on a New London based submarine and three loading and handling tests to evaluate some prototype MK-48 handling equipment. This involved three other submarines. Another involvement was the removal of long lead time handling items from USS JACK for use in GRAYLING. A final involvement surrounded the at-sea services a New London based submarine received in support of a special MK-48 required sound trial at the AUTEC Range.

The general concensus of the staff officers contacted was that the advance plans, from the submarine and squadron point of view, had been inadequate in several instances. In

three cases, the responsible staff officers had been bypassed; the agency representing the Project Manager's Office (PMO) had gone directly to the submarine. Another criticized the fact that requirements were not well documented, and that on the job responsibility was not clearly established. In general, lines of communication between fleet units and the participating MK-48 field agency appeared to be weak.

When Jim talked to Bob Marlin to get his views on past dealings with MK-48 agencies, he got an update on what was going on in Charleston. In addition to everything else that was going on, Bob claimed that he was going nuts trying to help run down miscellaneous material and equipment that had been shipped or mailed to the Charleston area by a couple of contractors and MK-48 field agencies to support the MK-48 work effort. It appeared that several of the technicians who were to work on GRAYLING began to arrive in Charleston, and they couldn't find the material and equipment that they'd sent ahead. Bob Marlin was trying to assist them, and in the process he'd learned that the stuff had been sent to a variety of addresses. He'd determined, thus far, that some of it had been sent directly to GRAYLING, some to COMSUBRON FOUR, some to the Charleston based submarine tender, the USS ORION, and some to CHASN, NSY.

"Why Hell, Jim," elaborated Bob, "some of these dudes have been here for almost a week, and they're still on a 'treasure hunt' trying to find their gear." Bob concluded with the following, "Your (COMSUBLANT's) message of 18 July

tasked us (COMSUBRON FOUR) to coordinate the required work; it went to everyone that needed to know -- why in the Hell couldn't these people touch base with us before coming in here from all directions, not knowing their ass from third base. Christ, it's like a three ring circus down here."

After having talked to the various staff officers and gathered a great deal of pertinent information, Jim finally sat down with CDR Greene on 4 September, and they tried to put together the message they'd promised the conference attendees. Their purpose was to take charge and establish a mandatory communications format to be followed by all parties in the future when dealing with the GRAYLING. The message was addressed to the PMO, NAVSHIPSYSCOM, COMOPTEVFOR, CHASN, NSY, and NUSC, Newport, with information copies to CINCLANTFLT, CHNAVMAT, MASWSP, COMSUBDEVGRU TWO, COMSUBRON FOUR, and GRAYLING. The subject was "USS GRAYLING MK-48 INSTALLATION". It alluded to all pertinent previous correspondence leading to the installation effort and enjoined that:

> "TO ENSURE OPTIMUM COORDINATION OF WORK EFFORTS DURING THIS CRITICAL PERIOD, COMSUBRON FOUR IS DESIGNATED THE PRIMARY POINT OF CONTACT REGARDING ALL MATTERS CONCERNING GRAYLING'S MK-48 CONVERSION AND PARTICIPATION IN THE TECH/OP EVAL PROGRAM. ALL RELATED COMMUNICATIONS SHOULD BE DIRECTED TO LCDR BOB MARLIN, COMSUBRON FOUR WEAPONS OFFICER, TELEPHONE 345-6666. THE ALTERNATE POINT OF CONTACT IS CDR A.K. AUGER, COMSUBDIV 42, TELEPHONE 345-6667."

Copies of the message were also distributed to all appropriate COMSUBLANT staff codes.

On 6 September, COMSUBLANT received a message from COMSUBRON FOUR outlining the required work items on GRAYLING, per the 2 September conference agreement. The list had expanded from the dozen or so items identified at the conference, to a total of 19. There were six major work efforts required in the fire control area, five in the installation of special instrumentation (DDAS) for the evaluation period, five to complete the "softening" of the loading and handling system in the torpedo room, and three in the combined training and installation calibration/alignment and check out areas.

It appeared as if the committments agreed to at the 2 September conference were being fulfilled as planned. CDR Greene had been keeping the powers to be at headquarters appraised of the situation, and timely responses by all concerned created the impression that all was, or was getting, well.

Concerning the N-62 shop relationship with headquarters, Jim recalled:

> "CDR Greene had made several trips to headquarters during those first two or three days after GRAYLING's message hit the air, making sure everyone knew that we were working on the problem, what we were doing, and that we would soon get things back on the track. He promised the Chief of Staff and CAPT Earnest (CAPT Ready's relief) that a report and recommendations from our office would be forthcoming, as soon as we had a handle on what had happened so we could determine what type of remedial action was necessary. During the Summer,

CAPT Earnest had relieved CAPT Ready as N-6, and, hindsighting it, we were damned lucky to have two such officers in a row. Both of them let CDR Greene run the N-62 shop with a free hand. We were able to enjoy minimized control over our correspondence and decisions. No holdups or horse crap over semantics -- correct spelling, grammar, and the facts were the only things that counted. For all intents and purposes, CDR Greene had direct access to the Chief of Staff, after bringing N-6 up to speed. And, his relationship with the Chief of Staff was equally as good. This meant that he could get in to see the Admiral when he felt it necessary. Looking back on it now, I can really appreciate how lucky we were -- it really helped us to respond quickly and with minimum 'bureaucratic bottlenecking.'"

On 10 September, CDR Greene signed out his promised report on the GRAYLING matter, with recommendations to the Chief of Staff, via CAPT Earnest. It summarized the conference events, the assigned tasks, the present status of GRAYLING's conversion efforts, which by that time seemed to be moving in the right direction to the satisfaction of all concerned, and his recommendations. As a prelude to his recommendations, he noted that although the GRAYLING effort appeared to be coming under control, an aggregation of information related to other fleet experiences indicated that there appeared to be a general undercurrent of weak communications and resultant coordination problems. Accordingly, he recommended that the noted deficiencies be passed on, formally or informally, to the PM. He made the following specific recommendations aimed at gaining control of all future interface requirements between the fleet and the MK-48 Program:

"A) All requests for COMSUBLANT services must be directed to COMSUBLANT (ATTN Code N-62), info to PMO, COMSUBDEVGRU TWO, at a minimum, and include the following:

1) Activity sponsoring the project.

2) Participating activities.

3) Requested services listing work items and/or events to be accomplished.

4) Requested dates and/or time frames.

5) Name and telephone number of primary point of contact in sponsoring activity who can address <u>all</u> matters relative to the requested service.

B) COMSUBLANT N-62 will make necessary arrangements and reply by message to the sponsoring activity, info to PMO and COMSUBDEVGRU TWO (the Flotilla, Squadron, and Ship when applicable) at a minimum, and address the following:

1) Affirm or negative regarding request.

2) Designate participating ship (command) and point of contact in the <u>Squadron</u>, (with telephone number) for all matters related to the requested service.

3) Set date, time and place for a briefing, list desired attendees, and designate COMSUBLANT REP.

C) A briefing will be held prior to all MK-48 associated Force projects. It will be hosted by COMSUBLANT or designated rep (Squadron or DEVGRU TWO), attended by all participating activities. At this briefing the sponsoring activity will:

1) Present a fully documented OP ORDER and/or work package to the cognizant Squadron and Ship covering the entire scope of participation/work required and define the responsibilities of all interested parties.

2) Present a documented work/event schedule, properly coordinated between participating activities in advance when required.

3) Clearly define point of contact, his telephone number, and designate the 'on the job supervisor.'

4) Take all questions and proposals from attendees for consideration, resolution, and implementation as required.

5) COMSUBLANT will reaffirm points of contact within the Force.

D) Subsequent to the briefing the sponsoring authority will assimilate all new inputs, as required, and submit corrected documentation to those concerned before commencement of work/exercise.

E) Upon commencement of work the Squadron involved will make weekly situation reports to COMSUBLANT N-62 via telephone. A final report will be submitted via message upon completion to COMSUBLANT info to PMO and other interested activities."

By mid September, Jim's conversations with Bob Marlin had indicated that the Squadron's confidence that they had the situation under control had increased considerably.

There were still some new requirements popping up however, six more to be exact, but they were being vectored through the Squadron Weapons Officer, with COMSUBLANT being kept informed. Among other things, the TAV had to be extended until 1 October, in order for CHASN, NSY to complete the fabrication, installation, and testing of certain torpedo handling equipment. On 25 September, it had come to light that people from the AUTEC Range had to install special underwater tracking equipment. That required the use of divers and also required interfacing with the ship's electronics systems. And, COMSUBRON FOUR only had two days to "scrounge up" the necessary divers. On 29 September NAVORDSYSCOM came up with still more test equipment to be installed: special tape recorders and an analog/digital convertor, both of which had to be interfaced with ship's systems by the A.D. Little Corp. On that same day, a similar installation involving special test equipment had to be installed by General Dynamics personnel from Electric Boat in Groton. All of these manifestations had come to be known as "Oh by the ways".

Jim had gotten involved in the A.D. Little and Electric Boat efforts. It took a series of telephone calls to the PMO, NUSC, Newport, and COMSUBRON FOUR. It had finally been established that NUSC, Newport would act for the PMO to coordinate the A.D. Little/Electric Boat efforts. Mr. Jim Callow was given as NUSC, Newport's point of contact. Jim got a message out on this effort too, summarizing who the points of contact were, for all concerned to read. The

message fulfilled its intended effect; it got Mr. Callow and Bob Marlin in touch on a formal basis, sanctioned by COMSUBLANT, and it let the world know that this type of liaison and coordination was required.

As it turned out, COMSUBLANT direction of this sort became very necessary from time to time as fleet involvement expanded. The N-62 shop, Jim in particular, now watched MK-48 message and letter traffic like a hawk, always prepared to jump right into the middle of the problem at the first indication of potential communications break downs involving COMSUBLANT commands. It was kind of a sorting process that continually required judicious action by COMSUBLANT, to make certain that the parties involved were talking to the right people. Sometimes the problem could be ironed out be a telephone call to each of the involved parties, but quite often an official message was required.

"Oh by the ways" continued to surface on a random basis, but at a much more reduced scale into October. GRAYLING eventually completed all hardware changes, crew familiarization requirements, and enjoyed a successful WSAT, as previously scheduled. The ship was declared ready to support MK-48 TECH/OP EVAL requirements on 7 November 1970.

The GRAYLING smoke had pretty well settled by the middle of October, permitting conduct of the at-sea calibration efforts and the WSAT in a fashion devoid of the pressures that had accompanied the opening weeks of GRAYLING's conversion. What had started out as a mighty tremendous undertaking had

worked out satisfactorily, but it was no simple task. In fact, conversations Jim had with Harold Progress and several others in the MK-48 program seemed to suggest that the GRAYLING effort was a great success. This really tightened Jim's jaws, for Jim and most of the people on scene felt that, if it really was a success, it was because the fleet had gotten involved. And, many of the Naval Officers that were familiar with the fiasco thought that the fleet had shouldered the PM's responsibility.

The real "end-all" came while GRAYLING was enroute to conduct her WSAT. Jim couldn't believe his ears. He looked up from his desk. CDR Greene was standing in front of Jim's desk. "What did you say?" asked Jim.

"I said the PMO wants ship's company to install the 'softening' SHIPALT in the next submarine," responded CDR Greene with a smile on his face (he wasn't laughing, just smiling).

But, Jim knew that he was serious. "Where did you get that from, Commander?" Jim queried.

"I just got a call from CAPT Surefoot. He wants us to try it. Based on what he saw on GRAYLING, he is of the opinion that the ship's Torpedomen, provided that the SHIPALT package is fabricated in advance, can make the installation in three weeks. He would provide one or two shipyard technical advisors to supervise. This would be, just for now, SHIPALT 1175 -- the one going on the 637 class fast attacks like GRAYLING. What do you think?"

Jim sagged back in his chair. "What do I think? I'll tell you what I think," blurted Jim. "There's a limit to what you can expect of a sailor -- submarine torpedomen are not shipyard outside machinists, and this SHIPALT is clearly shipyard work. Please excuse my emotions, Boss, but, with all due respect for CAPT Surefoot, I think he's crazy." However, Jim vividly remembered Harold Progress telling him way back in May that the PMO was alarmed over the magnitude of the unbudgeted cost of the "softening" SHIPALT, and that they were looking for ways to trim costs down to something that they could handle. "Boss," continued Jim, "do you mind telling me why he wants to do this?"

"Not at all, Jim. Cost -- he has to save money."

"Suspicion confirmed," thought Jim to himself. "What did you tell him?" asked Jim.

"I told him that we would try it, but that I wasn't very enthusiastic about the outcome. I also told him that we want to coordinate this one. He wants us to do it pronto. We have to line up another 637 class submarine. Sleep on it," concluded CDR Greene. "We'll sit down tomorrow and decide how we are going to handle this one."

MK-48 TORPEDO FLEET INTRODUCTION (F)

CAPT Surefoot's proposal that a 637 class submarine crew install loading and handling SHIPALTS[1] seemed unreasonable to Jim in face of the myriad of other problems facing fleet introduction. And, he was ill prepared to digest such a proposal with the foul taste of the GRAYLING fiasco still in his mouth. It wasn't as if they, the fleet, had nothing else to do; they really didn't need any more challenges. Furthermore, Jim knew all too well that this would tumble right on into the N-62 shop.[2] Jim really resented the fact that CDR Standfast and the N-402 shop (SSN Material) hadn't gotten sacked with this SHIPALT business. The N-402 people had done little more than lift a finger or two during the GRAYLING effort, and, if the lessons learned were going to be applied, it seemed a foregone conclusion that the N-62 shop was going

---

[1] See Appendix III for explanation of SHIPALT Program. For clarification of the acronyms used throughout the case, please refer to Appendix I.

[2] For this COMSUBLANT Staff Office and all others encountered, please refer to Exhibit 8 to determine organizational relationships.

This case was written by CDR David A. Newcomb and LCDR Robert F. Hurley, Jr., under the direction of Professors William Giauque and Michael Dean of the Naval Postgraduate School, Monterey, California. All names have been disguised.

Cases are prepared as a basis for class discussion and are not designed to present illustrations of either correct or incorrect handling of administrative problems.

to have to, once again, run with the ball. Jim knew full well that there was no easy way out now.

What "bugged" Jim the most was that they, the N-62 shop, worked very hard to identify MK-48 fleet introduction problems which they religiously passed on to both the appropriate staff codes and outside commands serving the MK-48 Program, but, aside from a lot of "lip service", nothing constructive seemed to be happening except through their own effort. At this point, Jim didn't consciously expect much help from the rest of the staff any more -- that was like pulling teeth.

Aside from specific efforts such as converting TRIGGER and GRAYLING, there were other outside problems that required the assistance of others. A good example of one of these outside problems was the ORDALT[3] Program. There was an area that the N-62 shop "bitched" about often, but one in which little was done, at least to Jim's satisfaction. Recollecting this problem, Jim related the following to this casewriter:

> "Those had been busy days, and a lot happened during that Fall in addition to GRAYLING. We were physically into the MK-48 business up to our necks, and, God knows, it seemed like everything deserved 100% of our time. But, the unresolved business of how to ready all of our submarines and when to do it was one of the really big things gnawing away at us. We needed no more challenges. Time was marching on. Furthermore, it was at this point in time that we began to recognize that the MK-48-0 fire control conversion, which had been done to all but one of our fast attack submarines, was only the first step up a long ladder. And, many of our

---

[3] See Appendix II for explanation of ORDALT Program.

submarines were known, for certain, to be way behind on the accomplishment of other ORDALTS. It would take a matter of days per submarine to accomplish this ORDALT backlog. Then the new 'SPEC Change ORDALT'[4] was coming at us also. 'SPEC Change' had been a prototype conglomoration of experimental ORDALTS when it went into PARGO and GRAYLING. Now it was about to be approved as a formal ORDALT which would take about four work weeks per submarine to install. Where was that time going to come from, and who the Hell was going to do the work? And, those damned Field Engineering Changes (FEC's) were still being stuffed into our submarines by Singer Librascope field engineers. We still didn't know what FEC's were in any great detail, but each MK-48-0 configured fire control system required over 80 of them. But, before I go any further, I think it's worth while to discuss some of the findings and events leading up to the first of November, so that you can develop an appreciation for the environment in which the business of submarine conversion to full MK-48 configuration was evolving.

"As I discussed with you before, Chief Sharp had really been digging into the fire control ORDALT administration area. By the time we were finishing up GRAYLING, he had shed a lot of light on the existing problem areas, and the underlying causes were just beginning to take shape. He had been greatly assisted in his research efforts by the contacts he had methodically established informally across the submarine ordnance support community, outside of SUBLANT. As it turned out, NOSSOLANT had become a primary source of information and support in the fire control area. The background on our relationship with them is rather interesting. Some fortuitous, but very profitable, groundwork had been laid by CDR Greene in July 1969, way back before either Chief Sharp or I had reported aboard.

"Shortly after reporting aboard, CDR Greene had encouraged the N-62 shop to make use of a variety of field services offered by NOSSOLANT. As a field office of NAVORD, its charter was service to the fleet. They were equipped primarily to order ORDALT kits, schedule installations, perform installations, and render a wide variety of technical assistance in the ordnance area to all ships of the fleet. Their services included not only procurement and installation of ORDALTS as requested by operational

---

[4] The "SPEC Change ORDALT" was an ORDALT which changed the basic MK-48-0 configured fire control systems to MK-48-1/2 dual purpose capability.

commanders, but they also included such things as helping to trouble shoot equipment, calibrating equipment, conducting installed shipboard ordnance equipment configuration verifications, conducting technical records reviews, and conducting ordnance supply support inspections. They even corrected documentation errors such as configuration errors in the Ship's Armament Inventory List (SAIL) and mailed in such corrections to the Master Configuration data bank in NAVORDSYSCOM. These services could be requested individually or in a package called a Weapons System Review (WSR), conducted by a team of NOSSOLANT ordnance experts.

"For some unclear reason, the N-62 shop had avoided doing any business with NOSSOLANT prior to CDR Greene's arrival. It is suspected that, somewhere along the line, NOSSOLANT people had worked on a submarine, something had gone wrong, and, as a result, COMSUBLANT had cut them off and began to do their ORDALT business with NUSC, Newport. NUSC, Newport, however, wasn't tailored to do things like WSR's, so SUBLANT had lost, or perhaps forgotten, the benefits of NOSSOLANT's talents. Anyhow, after CDR Greene reported aboard, NOSSOLANT was invited back into the arena. The first submarine of ours that they helped was the USS SKIPJACK. SKIPJACK was just coming out of overhaul in the Summer of 1969 when N-62 shop had met with NOSSOLANT representatives to set up her WSR. The WSR was subsequently carried off without any gliches, and SKIPJACK was reportedly delighted with the assistance that NOSSOLANT was able to render. Based on these results, several other submarines of ours were scheduled for WSR's over an extended period of time. NOSSOLANT really helped each command to straighten out their documentation, especially in the supply and configuration areas. But, somehow looking back, I know that we were viewing the results of each visit as an individual ship's problem. Then, about the end of March 1970, after Chief Sharp had been on the staff for a couple of months, he came to me with reports from NOSSOLANT indicating that MK-48-0 ORDALTS were routinely among those configuration profiles having spare part support and supply documentation support problems. As a result, Chief Sharp and I met with NOSSOLANT personnel during early April -- It was at that meeting that I first met NOSSOLANT's procurement expert, Mr. Heindorf Glockenspiel. He and his procurement people ultimately rendered an immeasurable service to us. However, the full scope of the support problems were still not clear at this time, but Mr. Glockenspiel's findings indicated that, for some reason or reasons,

the supply COSAL/APL[5] documentation issued to ships incident to overhauls or significant MK-48 ORDALT configuration changes more often than not did not correctly support the installed equipments. MK-48-0 fire control alterations were routinely included in this category. I noted the need to look further into this problem in my 24 April 1970 'MK-48 Program Staff Review.' By working with NOSSOLANT and by riding the submarines ourselves, when the opportunity permitted, we got a 'first hand' picture of the problem symptoms. And, through continuing inquiries and research into the administration of the ORDALT program, with the assistance of NAVORDSYSCOM, NUSC, Newport, and others, we slowly put together a picture of what was happening to our submarines. By mid October 1970, we pretty well knew what wasn't right about the program. However, we didn't yet know all of the exact causes, exactly who was at fault, exactly who could correct the problems, or, for that matter, exactly who to complain to. We did know that many of our ship's SAIL records were grossly inaccurate. Since these records were the data base for NAVORDSYSCOM's master computer configuration records in Washington, D.C., it had to follow that these records were also plagued with inaccuracies. This, in turn, had led to the issuance of inaccurate Maintenance Data Cards (MDC's), inaccurate supply support documents, inadequate spare part support, inaccurate or incorrect technical publications, inaccurate engineering drawings, and, in some cases, shipyard work lists calling out incorrect overhaul ORDALT work requirements. The problem was compounded in many ways. The arbitrary installation of ORDALTS on a catch as catch can basis was frequently accomplished without the benefit of an orderly master schedule to coordinate and control the installation efforts. As a result, the documentation updating efforts that were supposed to be done concurrently with the installation efforts were often done in an unsatisfactory fashion. In some cases this requirement was overlooked completely. Another problem was that unproofed ORDALTS, those installed prior to their complete and proper integration into the formal ORDALT system, were finding their way into the shipyard work packages. Often they had been installed in one or many ships before deficiencies were detected. This required costly changes and more potential for faulty documentation and poor supply support.

---

[5] Consolidated Shipboard Allowance List/Allowance Parts List.

On top of all this came the MK-48-0 ORDALTS, followed by more than 80 FEC's, and then the 'SPEC Change ORDALT.' The MK-48 ORDALT spare parts were sent to the installing activities by NAVORDSYSCOM, and the required COSAL/APL documents were to be concurrently sent directly to the affected ship by the Ship's Part Control Center (SPCC), one of NAVSUPSYSCOM's Inventory Control Points (ICP's). Through NOSSOLANT's continuing inspections, however, it was being discovered that most ships that had had MK-48 ORDALTS installed were deficient in required spare parts and did not have the proper COSAL/APL documentation. What had happened, it appears, was that the ships had never received the correct COSAL/APL documentation from SPCC. Hence, too often, the spare parts arrived and no one knew what they were all for. The fates of these spare parts were varied, but many were off-loaded from the ships. In come cases shipboard personnel knew what the spare parts were for and they were dutifully stored away. Unfortunately, these people were eventually transferred, and the excess spare parts were soon off-loaded, when a subsequent inventory showed their presence but no accompanying documentation allowing all of the items to be carried. In the case of the ships that managed to get the correct COSAL/APL documentation or that corrected their old documentation under the advice of ORDALT installation personnel, another fate often befell the spare parts. They remained in the ship's inventories, but, because the MK-48 fire control equipment wasn't being exercised, there were no part failures requiring use of the spare parts. This lack of usage data, in time, caused the spare parts to be off-loaded as excess material. There were pitfalls at every turn.

"MK-48 FEC's added to the problem because, too often, the onboard documentation changes were not being concurrently made. What's more, these alterations were not ORDALTS, so they could not be reflected in ths ship's SAIL or NAVORDSYSCOM's master computer configuration records, and we had no way to crank them into the system.

"As you can see, we felt that we had one Hell of a problem in the fire control area. Keeping in mind the fact that we had four completely different fire control systems (MK-101,MK-106,MK-112, and MK-113) installed in our submarines, with several modifications of each, you can begin to appreciate our dilemna. On top of all this, then, we had the new additional prospect of the evolving MK-48 loading and handling SHIPALTS required to 'soften' our ships. Here too, we had a requirement for twelve different alteration plans -- one tailored for each class of submarine.

"Believe me, I'm not exaggerating the problem. We'd heard a dozen or more 'sea stories' about how fire control spare parts were being left in shipyards, off-loaded as excess, given away, etc. But, if I ever thought the situation wasn't really that bad, I really had the picture painted for me, in living color, by a telephone call I received one morning in November 1970. It was the Submarine Squadron Fifty Weapons Officer[6], LCDR Frank Hammer

'Jim,' he said, 'guess what I just found?'

'I don't know, Frank. What did you just find?' I said.

'$20,000 worth of MK-48 fire control spare parts in the "Dempster dumpster," at the head of the pier,' Frank continued.

Then I asked, 'How in the Hell did that happen?'

'They were off-laoded by the (expletive deleted) BLIVITFISH sometime last night as excess. No one onboard could find any paperwork telling what they were for, so they assumed they were "good for nothing,"' answered Frank.

"That pretty much says it all, regarding the fire control spare parts problem. This, then, was the environment in which we were working at that point in time."

Chief Sharp's rememberance of the Fall of 1970 pretty much confirmed what Jim White had said. Chief Sharp had an opportunity to review Jim's comments, after which he was asked how he saw the situation. He recalled the following to this casewriter:

"That's part of it. I couldn't help but note that Mr. White didn't mention that I was still crashing around trying to keep a lid on all the other force fire control problems. That's another story in itself. One thing that Mr. White could have emphasized was that, with NOSSOLANT's help, we were starting, one ship at a time, to get the configuration business squared away. But, I guess we didn't start to gain any confidence that we were making headway until much later."

---

[6] For this and all further reference to submarine Squadrons, Flotillas, or Division, refer to Exhibit (13) to determing organizational relationships.

NOSSOLANT personnel vividly recalled the period discussed by Jim and Chief Sharp. In fact, Mr. Heindorf Glockenspiel had been involved in SUBLANT's ordnance supply support problems since the first submarine WSR on SKIPJACK. His area of expertise was spare parts support for fleet weapons systems, and, at that point in time, he was working on a project which involved translating the information found in a ship's SAIL into supply support language. The output of this translation effort was a profile of all allowance documents required to support a specific technical configuration. This service was a part of NOSSOLANT's WSR package. Mr. Glockenspiel reconstructed NOSSOLANT's involvement and recalled his personal impressions of the problem causes for this casewriter:

> "We used a NOSSOLANT constructed quasi-COSAL profile based on what we found the ship's physical installation to be. Our 'hand-made' documents were compared with those COSAL documents issued to the ship by SPCC and we found that the ship's existing documentation did not support the actual configuration in a number of areas. ORDALTS and FEC's had affected the ship's configuration, but this was not always displayed in the documentation. As a matter of fact, some of the equipment wasn't even supported. This wasn't really a great surprise, because this problem existed, to varying degrees, on all ships where configuration changes had taken place. The first time we really focused on MK-48 configuration spares occurred on the USS DANIEL BOONE, right after she came out of overhaul at Newport News Shipbuilding and Drydock Co. (NNSBDDCO). While conducting the WSR, we went down the MK-48 fire control support profile listing, line item by line item, and discovered that, of the $40,000 worth of initial spare parts procured and paid for by NAVORDSYSCOM and sent to the ship while in the shipyard, only about $20,000 worth were actually onboard the ship. The other $20,000 worth were in a shipyard warehouse. Why? Because the documentation sent to the ship by SPCC didn't agree with the documentation that NAVORDSYSCOM

and the contractor were working with. There was a decided gap between what the supply side of the house knew and what the technical side knew. As a result of this, we initiated correspondence on the subject and inspected more submarines during early 1970. We discovered a pattern of the same problems from New London to Charleston -- It became quite apparent that something had to be done. Therefore, we, with the concurrence of the PMO, NAVORDSYSCOM, and COMSUBLANT, took the initiative and began to force load the missing MK-48 fire control spare parts on the ships inspected. After all, the PMO selected and paid for these parts, and this was the only way we could ensure that they wouldn't be pushed in the submarine's front door only to be shoved out the back door. It took us several months of looking at the same old problems before we reached this point. But, by that time we knew that it was going to take positive physical involvement to correct an individual ship's problems. As the NAVORDSYSCOM 8000 series instruction on the subject is written, the custodians of the ordnance equipments, in this case the submarines, are responsible for ensuring that all equipment changes are properly reported. In a lot of cases, the shipyard or contractor's people had been making these changes and the ship simply didn't know what was going on. Accordingly, all too often, this inadequate dialogue between the ship and the technicians resulted in none of the changes getting reported. We all learned a lot during those days. It took three laborious years to get the mess straightened out, but, as you probably already know, COMSUBLANT now schedules all ORDALT support administration through us, and there isn't a thing that goes on or off of a submarine that isn't controlled. Back in those days, we were really grasping, but nowadays each ship is double checked to see that everything from hardware to software meshes and is totally supported. This is done after each change by all required functional support sources in the ordnance community -- It's really slick. How we got all the players together is another story -- White or Sharp can tell you that one."

Mr. Glockenspiel was asked what he thought had gone wrong at the PM level that might have caused the MK-48 fire control support problems to occur. Before he was given a chance to answer, he was told that Jim White and Chief Sharp both felt that getting to the real source of the breakdown

in management was really tough. The PMO staff really seemed to have a handle on the fire control business, but, somehow, between the manufacturer, Singer Librascope, and the submarines, something had gone wrong to cause the problems to occur. Mr. Glockenspiel responded as follows:

> "The problem wasn't unique; it existed across the board with other PM's as well. They do a fine job of procurement, managing, and the other kinds of things PM's do, but when it comes to the last detail -- implementation at the fleet level -- there is no one on site to see what is going on. I got involved because my business is spare parts -- not necessarily MK-48 spare parts. There were obviously problems in the documentation -- hence in the supply system, but someone who is knowledgeable has to validate that documentation or those errors and their source will go unidentified and uncorrected. The PM had told NAVSUPSYSCOM what kind of support was needed, but NAVSUPSYSCOM has a master computer program for issuing spare parts. If MK-48 fire control peculiar requirements are not called out for special treatment in the form of computer technical overrides, the submarine COSAL's are issued in accordance with the format that exists for all other ordnance equipment. In effect, the COSAL's that SUBLANT units were receiving called for about 50% fewer spares, no spares in some cases, than NAVORDSYSCOM had intended. It was up to the PM's technical people to review the manufacturer's spare parts provisioning list and check out the COSAL for support continuity. NUSC, Newport, the technical director for fire control development, was the In Service Engineering Agent (ISEA), and, as such, was required to attend the Librascope provisioning conference and interface with SPCC to ensure compatibility. It's hard to say where the mismatch occurred, but, ultimately, the supply documents didn't support the PM's intentions. In fact, in many cases, the poor old PM had to pay double to meet his intentions. That's in effect what happened when he had to reorder those spare parts that were lost to inadvertent discarding. It's really difficult to say who, exactly, dropped the ball. The ships, although guilty of numerous other errors, certainly had no way of knowing what spare parts they were supposed to receive. As I see it, what it all comes down to is, if you don't have someone to monitor things at the fleet level, then all of the effective planning in

the world just goes pffffff.... on the ship. We, NOSSOLANT, serve the fleet every day; we are available as an arm of NAVORDSYSCOM -- Wouldn't it make sense if ILS[7] procurement plans included us in the loop to close that gap? Unfortunately, this isn't often done."

Mr. Glockenspiel's comments were substantiated by Mr. Sam Sparks, a NOSSOLANT engineer who had supervised the installation of many ORDALTS by NOSSOLANT teams. He added his own impression that the big break through in starting to straighten out the SUBLANT ORDALT and ordnance equipment configuration quagmire had come with the dialogue that had begun between himself and Chief Oblisk (Chief Sharp's predecessor), back in the Summer of 1969 -- That was the first formal attempt at scheduling and controlling ORDALTS at the Force Commander's level.

In addition to the direction of the WESTINGHOUSE MK-48-0/2 torpedo technical evaluation and representation of the PMO in the field, responsible for MK-48 ancilliary support systems such as: loading and handling, retrievers, and workshops ashore and afloat, NUSC, Newport was deeply involved in the MK-48 fire control area. NUSC was also responsible for direction of the technical evaluation of the fire control system, hence, in the forefront of the fire control change program. NUSC, Newport's efforts in the MK-48 fire control area were considered excellent by the PMO and many others. Most notable was the fact that the required fire control

---

[7] Integrated Logistics Support.

changes had kept pace with all of the many torpedo changes required throughout its growth. This effort wasn't slowed in the least bit by the debut of the CELVITE MK-48-1 torpedo. They were not only directing the fire control technical evaluation; they were also bringing a lot of expertise to bear in solving fire control engineering problems jointly with Singer Librascope. This effort was the source of many of SUBLANT's headaches: Specifically in the FEC arena. Despite the praise directed toward NUSC, Newport from many quarters, which included Jim, he also saw them as those people responsible for an endless parade of uncontrolled changes and their attendant problems. So distraught over NUSC, Newport's and Singer Librascope's FEC induced problems was the N-62 shop that, by November 1970, CDR Greene, Jim and Chief Sharp had let it be known, at every available opportunity, that FEC's were making everyone very unhappy, they were incompatible with the ORDALT support system, and they, COMSUBLANT, wanted them to stop.

When reminded of COMSUBLANT's point of view in the late Fall of 1970, Mr. Ron Tyme, director of NUSC, Newport's fire control engineering effort at that time, responded as follows:

> "Well it all started when there was only a MK-48-0 torpedo. At that time everyone thought that it was the ultimate torpedo. In 1964 we entered into a contract with Librascope for the fire control system. At that time NUSC, Newport had a coordinating program office here in Newport. I was one of three guys working out of that office. As you know NUSC was the technical director for the fire control system, and under that charter our office interfaced with the PMO and ORL, Penn State. In those days we were beset with many initial technical problems. We

really had no one who was familiar with the problems of the fleet -- you know, familiar with shipboard problems. Why, if the torpedo and the fire control system were designed to those initial specs, with the required equipment in the attack center and the torpedo room and all the cable connecting them, the system never would have worked. Recognition of this prompted our first big change. Initially, the specs were changed, mostly on the torpedo, and they continued to change at a hectic pace for over a year. These changes resulted in contractual changes, not FEC's; they came later. The situation was compounded by the fact that we had several quasi-managers -- ORL/PSU, NUSC, Newport, the PMO, and many more who always seemed to have to have a say. They were all quite competent, but it was difficult for them to make mutually agreeable decisions. With the torpedo specs continually changing, with the severe time constraints, and with the continuing requirement that the fire control equipment keep pace with the torpedo, the pressure was always on. There was not a good contractual arrangement either. We had to operate under fixed price contracts with both Librascope and Westinghouse, and the changes were really driving the price up. It was hard, in those early days, to convince the PM that he couldn't change the torpedo without expecting to change the fire control also -- It always seemed to come as a surprize to the PMO. One little change in the torpedo could be a big change in the fire control system. When the CLEVITE torpedo, the MK-48-1, came in, it became a different ball game -- It was a different weapon, and the fire control system had to accommodate it as well as the MK-48-2. Initially, the decision was made, MK-48-1 not withstanding, to go ahead and totally install the basic MK-48-0 fire control systems in all ships -- the necessary ORDALTS to make these equipments compatible with the selected weapon could come later. Budgets, ship overhaul cycles, and many other things, more or less, locked that decision in. However, in order to keep up with the torpedo test and evaluation findings, these fire control systems had to be brought up to the latest torpedo configuration. Accordingly, FEC's were developed to keep pace with the rapid changes going into the torpedo. There was no way to get those changes introduced and installed in a rapid enough fashion through the ORDALT system as it existed. It would have taken at least a year to process the paper for each change. We took a lot of criticism from the fleet in those days. Guys like Bill Greene and Jim White were very vocal in their criticism, but we did not have time to do it any other way -- We had tremendous pressures to keep the fire control system

updated, coming from the highest levels of the Navy. We really felt that the Fleet Commanders and their objections to FEC's were more of a hindrance than a help -- They just didn't understand that we had to get those changes into the fire control systems, and FEC's were the only way to do it.

"In retrospect, I think a lot of the conflict would have been avoided if the fleet had been brought into the MK-48 Program earlier, at the planning level, and had been briefed on the details of the program and the ongoing problems, but they were kept in the dark. The high level decision makers were forcing decisions down on the PM, without conscious concern or, perhaps, knowledge as to how they would impact on the fleet. And, we were caught in the middle. The fleet did, however, profit in one way. Many submarines were several thousands of man hours behind on accomplishment of ORDALTS. Accomplishment of these outstanding ORDALTS was a basic prerequisite to updating the fire control systems to MK-48 configuration. As a result, the MK-48 Program forced and subsidized much of the effort to get these alterations completed so we could establish an ORDALT baseline upon which we could plan and install MK-48. To be candid, up until that time, the Fleet Commanders had lost control of the ordnance configurations of their submarines."

When questioned regarding the spare parts problems and the disagreement between the NAVORDSYSCOM list of MK-48 fire control spare parts and the SPCC COSAL's, Mr. Tyme responded as follows:

"We were aware of the problems. Vini O'Shea's group right here in NUSC, Newport would review provisioning lists, and he would implement the necessary guidance and initiate the necessary technical overrides, but the problem was in SPCC. The necessary information was fed to them, but their output never matched the input. I don't like to tell tales out of school, but, no matter how I look at it, I'd have to say that the problem laid somewhere inside SPCC. One of the problems SPCC had was a historic time lag problem -- I've seen as much as a year and a half lapse between the provisioning conference and the issuance of the APL's and COSALS by SPCC in other projects. They are getting better, but that has been a long-standing problem source. Meanwhile, the poor old ships were crying for updated APL's. Why Hell, I don't have to tell you. We could sit

here for hours and swap 'sea stories' about the fate of the spare parts we paid for and pushed to the submarines, but that would get us nowhere. It didn't take us many of these episodes to decide that we were going to have to do something about it, ourselves. What we did to alleviate the problem was mark up the old APL's and give them to the submarines as Interim Allowance Parts Lists (IAPL's) as we accomplished the actual hardware alterations. They'd use the IAPL's to justify keeping the spare parts onboard 'till the 'system' finally caught up with the problem. I know that sounds like a pretty unorthodox approach to the problem, but those were the kinds of things that we had to do to get things done. Why, you know how the fleet was 'bitching' about our FEC's, I'm sure. Well, some people might have had a cardiac arrest if they would have found out about our XO's. These were what we called Experimental ORDALTS. These were alterations we would make to the fire control systems actually firing torpedoes during the TECH/OPEVAL's and the STP.[8] We would remove them when we would install the formal FEC or the ORDALT. We saw no need to publicize the fact that we were doing this, because it only affected a few submarines, and the entire process was kept under our thumb."

When asked about the fire control situation during the period surrounding the GRAYLING conversion, Mr. Tyme responded as follows:

"Well if you know anything about the GRAYLING fiasco, I'm sure it looks pretty foolish to you. But, before I give you my side of the story, let me lead up to it a bit and try to set the perspective. As you know, the basic MK-48-0 fire control installation had been going into the submarines during their shipyard overhauls. However, all of the follow up alterations had to go into the submarines in the field, at least for the most part. Our change requirements were accelerating and beginning to peak around November 1970. We ran into terrible problems if COMSUBLANT would switch submarines on us at the last minute, when scheduling the installation of our fire control alterations -- each submarine was slightly different in configuration. Accordingly, we would have a Hell of a time

---

[8] Selection Test Program.

getting our documentation straightened out before we went aboard. Because of these configuration nuances, our MK-48 fire control alterations were hand tailored to specific ships. Furthermore, these hardware changes had to be supported by a considerable software requirement. Technical manuals, COSAL's, PMS[9] changes, and MRC[10] card changes were involved as well as spare parts. This is why last minute ship changes used to get us so upset. And, if we didn't get all of our documentation straightened out, we really used to catch Hell. COMSUBLANT eventually got the scheduling under control, but, at that time, in November 1970, scheduling was really arbitrary from where we stood. I guess the biggest contributor to our looking somewhat foolish during the GRAYLING conversion was the requirement laid upon us by the PMO just prior to her conversion. About a month to six weeks prior to GRAYLING's conversion, we get this frantic telephone call from the PMO. It seems as though they'd just had a big review at the DOD/CNO level -- They wanted a 'shoot out'. They wanted a comparative evaluation of the MOD-0 and the MOD-1/2, from the same submarine. Well Christ, that just wasn't compatible. I mean the MK-48-0, anti-submarine, torpedo couldn't be fired with the 'SPEC Change ORDALT', but the MK-48-1/2, dual purpose, torpedoes couldn't be fired without it. We didn't know what the Hell we were going to do. We struggled with the problem during the limited time allotted, and we were saved by the fact that many of the fast attack submarines had two attack directors installed in their fire control system, GRAYLING included. We took advantage of this fact and developed what we called the 'Half & Half' ORDALT. But, again, it really wasn't an ORDALT -- We'd never been able to do it in time if it was. What we did was configure one of the attack directors to fire the anti-submarine torpedo and the other to fire both dual purpose torpedoes. Believe me, getting ready to do this on GRAYLING was no trivial matter, and trying to do it together with all of the other planned conversion work proved to be a pretty uncoordinated evolution at best. About the only thing good I can say regarding the GRALYING 'flap' is that we did get the job done. Today I can report with

---

[9] Planned Maintenance System.

[10] Maintenance Requirements Cards.

a great deal of satisfaction that we've come a long way in the ORDALT management business since those days. Things have improved immeasurably, particularly in terms of management coordination."

The atmosphere in the N-62 shop, at least from Jim's standpoint, was almost foreboding, the morning he stepped into CDR Greene's office to discuss how they would go about having the "ship's force" of some, yet unidentified, submarine install the MK-48 "Softening SHIPALT".

"Well, Boss," Jim began, "I guess we have to decide who is going to have the honor of being the first submarine to overhaul their own torpedo room."

"We don't have to look far, Jim," answered CDR Greene. "I have already touched base with the Operations people (N-31), and they already have a ship lined up to get ready to relieve PARGO. PARGO will be going into the shipyard in a few months, as I'm sure you know."

"Who's the lucky guy?" asked Jim.

"The USS BERGALL[11]," answered CDR Greene.

"When?" asked Jim.

"That's the sticky wicket, Jim," replied CDR Greene. "It's going to happen over the Christmas Holidays. We're going to have to do a little diplomatic planning as well as overhaul planning."

After drawing a couple of cups of coffee, Jim and CDR Greene settled down in CDR Greene's office to review the

---

[11] BERGALL was an SSN assigned to COMSUBDEVGRU TWO.

bidding. The discussion was free wheeling and attempted to address the full scope of considerations. The "brainstorming effort" focused on lessons learned from the GRAYLING experience, steps necessary to assure control of the BERGALL effort, what role COMSUBLANT (specifically the N-62 shop) should play, who the key participants in the BERGALL conversion effort would be, what could go wrong, what the tentative schedule should look like, what could be done right now to enhance the probability of a successful effort, how the necessary communications and coordination could be assured, and a myriad of other related matters. Jim took copious notes throughout the session. After about two hours, a "game plan" began to emerge. In essence, their finally agreed upon approach closely paralleled the basic recommendations contained in CDR Greene's 10 September memo to the Chief of Staff.[12]

When the session concluded, CDR Greene went over to headquarters[13] to bring CAPT Earnest up to speed on the tentative plans for handling the BERGALL conversion. Jim returned to his office and began to review his notes. The first major step that they'd agreed to was to call a BERGALL MK-48 conversion meeting on COMSUBLANT "turf". It had also been decided that, pending CAPT Earnest's blessing, the meeting

---

[12] This memo summarized the problems surrounding the GRAYLING conversion effort and made pertinent recommendations for avoidance of similar problems during future MK-48 conversion efforts. For more detail, please refer to page E-13 of the (E) case.

[13] COMSUBLANT headquarters was 4.5 miles away from the complex where the N-62 offices were located.

would be chaired by COMSUBLANT (represented by CDR Greene) and would be physically convened in the COMSUBDEVGRU TWO conference room at the Submarine Base in New London, Connecticut (SUBASE, NLON). These decisions were reached for several reasons. Paramount, however, was the fact that they wanted it unmistakably clear that COMSUBLANT was in charge of this one. Other considerations included the fact that the conversion would be performed in New London, COMSUBDEVGRU TWO was BERGALL's parent squadron, and all of the key submarine force players would be located in New London. Twelve November was the date tentatively established for the meeting. That day was chosen because it was in the near term yet allowed enough time to get all the participants lined up, but, also, because the BERGALL would be out to sea. The latter fact raised questions in some quarters, but it had been decided that the ship should not be burdened with the initial "flap" of "getting organized". Jim and CDR Greene had concluded that the Christmas work requirement was frustrating enough. Accordingly, they agreed that the BERGALL's Commanding Officer would be brought into the problem only after a well defined work package, schedule, and control system were firmly established.

Before the message setting things into motion was drafted, Jim spent three days on the telephone clearing the 12 November date with the key players. COMSUBDEVGRU TWO welcomed the proposed plan, but Jim thought he detected a hint of tacit reluctance on the part of some offices representing

the PM to endorse the requirement for such a meeting. Never-the-less, 12 November was agreed upon. In parallel with establishing the date, Jim spent considerable time setting up an agenda for the forthcoming meeting. Salient points were discussed on the telephone with the potential meeting attendees who would be affected. Easing Jim's burden considerably was the fact that the PMO had been very helpful in identifying the people who would be involved in the BERGALL conversion effort. The telephone dialogue had stressed the need for coordination, reminding everyone that BERGALL would receive the total MK-48 conversion package -- The fire control ORDALTS as well as the loading and handling SHIPALT.

The official COMSUBLANT message calling the 12 November meeting was signed off the staff on 5 November. Once again COMSUBLANT was sending a message to multiple addressees regarding MK-48 conversion of a submarine. However, this time the message called out three new requirements: COMSUBLANT would chair the meeting, the PM was requested to provide the name of one man who would be an "on the job supervisor" for <u>all</u> work, and an integrated and documented <u>total</u> work package, with detailed schedules and milestones, was requested.

On 12 November, all interested participants were assembled in the COMSUBDEVGRU TWO conference room as planned. In addition to Jim and CDR Greene, there were 16 official attendees representing eight different commands and agencies. The organizations represented were NUSC, Newport (Mr. Ron Tyme and Mr. Andy Watt for fire control and Mr. I.M. Pulling

for loading and handling), Singer Librascope (Mr. G. O'Really and Mr. Z. Formatt), COMSUBDEVGRU TWO (LCDR V. Keen, the COMSUBDEVGRU TWO MK-48 Officer and LCDR J. Verrily, the COMSUBDEVGRU TWO Weapons Officer), CHASN, NSY (Mr. Jammy Landry and LCDR B. Decker), NAVSEC (Mr. A.R. Baker), NOSSOLANT (Mr. W. Blockman), PMO-402 (Mr. Rod Stiles for fire control and Mr. Bill Roper for loading and handling), and there was also a contingent of three representatives from the Electric Boat Division of General Dynamics to address post SHIPALT load line alignment.[14]

During the moments immediately preceeding the meeting, Jim and CDR Greene, coffee cups in hand, mingled with the attendees. Jim, once again, thought he'd detected an air of coolness among some of those present, regarding the need for the meeting. He mentioned this to CDR Greene, just before the meeting started. CDR Greene smiled, and, with a bit of a twinkle in his eyes, he said, "I think some of these guys are in for a rather rude awakening. They may find their feet being held to the fire before the morning's over."

CDR Greene called the meeting to order at 1000 sharp. He quickly established the fact that the USS BERGALL would begin a special availability on 20 November, to conclude on

---

[14] The alignment of the torpedo resting in the storage tray when in position to be loaded into each of the torpedo tubes. The longitudinal center of the torpedo must be in line with the tube center if the torpedo is to be loaded without scratching or marring its surface. Gross misalignment can result in the inability to load the torpedo. Please refer to Exhibit (14) and Appendix VI.

17 January 1971, for the purpose of receiving the required MK-48 Torpedo Weapons System ORDALTS and SHIPALTS. He drove home the point that GRAYLING's recent conversion effort had been frought with difficulties, precipitated by the lack of communications and coordination. He cited the fact that a prime reason for calling the present meeting was "to establish early and effective communications channels at all levels, and to define clear cut responsibilities."

CDR Greene then proceeded, introducing pertinent items succinctly, soliciting discussion, and effectively closing discussion with a firm statement of the agreed course of action and assignment of responsibility. About CDR Greene's platform behavior, one of the attendees recalled:

> "He had a smile on his face, was able to judiciously inject levity where appropriate, but, from the start, he effectively conveyed the message that MK-48 fleet interface efforts, to date, had been lacking, that the agenda was poignantly relevant, and that COMMANDER SUBMARINE FORCE, UNITED STATES ATLANTIC FLEET was firmly in control at the helm."

The first subject was the identification of the individual responsible for overall onboard supervision and coordination. Mr. Stiles, of the PMO, formally appointed Mr. Formatt of Singer Librascope. CDR Greene then stated that the first responsibility required of Mr. Formatt was the generation and presentation of an integrated work package and schedule to all parties concerned. The second requirement was that he meet with LCDR Keen, of COMSUBDEVGRU TWO, and the Commanding Officer of the BERGALL, at the earliest opportunity, to review the completed package/schedule and implement

same. Evidently, Mr. Formatt had been informally forewarned by the PMO, because, to the surprise of CDR Greene, Jim, and the others present, he presented an already, well prepared, integrated work package.

CDR Greene thanked Mr. Formatt and stated that the package would serve as an excellent base line, but further stated that he would keep to the agenda to ensure that independent review of the scope of the work would take place. CDR Greene's outline for discussion called for review of the 26 work items performed on GRAYLING during September and October, identification of those items applicable to BERGALL, and identification of new items and problems. He solicited the scope of work required, as independently arrived at by each command, vendor, and agency involved, and called for a review of potential work scheduling problems. He then read the list of GRAYLING work items and enjoined the attendees to consider their requirements to the last detail. In order to drive home the latter point, he asked the attendees if they had given full consideration to such items as the following:

- Crane services required from SUBASE, NLON
- Rigger services
- Disposition and storing of materials required to support the onboard work effort
- Mailing address of such materials and points of contact to be held responsible

- Pre-installation ship checks to determine BERGALL's configuration differences
- Clean-up/painting touch up/welding services
- Adequacy of spare parts support for new equipments
- BERGALL's load line alignment status before work began
- WSAT[15] schedules and requirements expected
- Training and guidance of BERGALL's crew members doing SHIPALT work and operating new equipment

As CDR Greene read the list, Jim surveyed the faces of those attending. He noted some uneasy shifting around and note taking, as CDR Greene ticked off items that apparently had not received full prior attention.

CDR Greene kept a tight rein on the dialogue that followed; the ensuing oratory of the participants was dynamic and loaded with revelations, problems, conflicts, surprises and awakening concern. CDR Greene adroitly guided each discussion, summarized conclusions, and tasked followup action throughout. Jim kept the minutes. The meeting lasted until late afternoon. While many small details that required action emerged, there were some very significant points broached that were extremely pertinent to success. Each impacted like a bombshell, causing group dismay. For example: It was determined that installation of the SHIPALT by "Forces Afloat" did not mean just the ship's crew. Submarine tender

---

[15] Weapons System Accuracy Trials

or shore based machine shop assistance was required. Hence, SUBASE, NLON Engineering and Repair Facility (SUBASE E&R) services were determined to be necessary. SUBASE E&R had not been aware of this requirement -- As a matter of fact, no one in the submarine force had been aware of the requirement. COMSUBDEVGRU TWO accepted the responsibility to affect liaison. The PMO representatives agreed that some degree of funding would be required. CHASN, NSY reported that the SHIPALT kits would not be available until 23 December. NUSC, Newport reported that two loading and handling demonstrations were required to ensure that all problems were corrected. Electric Boat said three days would be required for load line alignment. CONSUBDEVGRU TWO let it be known that sea trials had to be conducted on 14 January. Everyone was upset over having to work through the holidays. Mr. Landry from CHASN, NSY broached a previously unidentified requirement to drill 36 holes in certain load line hardware fixtures in a machine shop (i.e. SUBASE E&R) and to check the accuracy of each hole, in the ship, before drilling the next hole -- This process was deemed so time consuming that most of the attendees felt that it couldn't be done between 23 December and 14 January. Mr. Formatt appeared stunned that his preliminary schedule inputs could have been so inadequate. The group was in a near frenzy. CDR Greene handled this by asking Mr. Landry if the SHIPALT kits could be shipped in parts (i.e. if portions of the kits could be shipped as completed). After a series of telephone calls to Charleston, it was

determined that partial kits could be in New London by 10 December, and the hole drilling effort could begin at that time. After other details such as "ship's force" guidance to be provided and special tools to be provided were resolved, it was determined that work on the SHIPALT could probably be completed by 14 January.

Each item was "hammered out" in this manner, with varying degrees of complication, before a final approach was arrived at. Mr. Formatt kept shaking his head and taking notes.

When the meeting finally adjourned, it was unanimously agreed that the project would have certainly floundered without benefit of the meeting. The effort had been exhaustive. Jim's notes later generated 15 typewritten pages of minutes. Mr. Formatt had a bundle of notes filling his briefcase, from which to make changes to his work package and schedule. He was still shaking his head when he left. No one left the meeting without tasks and follow up requirements. But, a feasible schedule had been worked out, and an integrated work package would result. There was a monumental amount of physical work yet to be done on BERGALL, but there would be a viable plan to guide its accomplishment. It appeared as if the scope of the work and all of the work requirements had been satisfactorily identified. Only time would tell, but the stage appeared to be adequately set at that point in time.

Jim and CDR Greene adjourned to the "O" Club[16] bar and ordered a couple of beers. There they discussed the day's events, the rocky road traveled to get there, and the uncertainty ahead. At one point during the discussion, CDR Greene rocked his head back, drained his beer glass, banged the empty glass on the bar, turned to Jim, looked him squarely in his eyes and said, "We have over a hundred submarines in the Force, Jim, at least a dozen different classes -- Is it going to take this kind of an effort to get MK-48 installed on each and every one of them?"

---

[16] The Officer's Club

CONCLUSION

The introduction suggested that even the most complicated of problems can be handled through well planned utilization of available expertise, brought to bear through coordinated effort, which is, in turn, accomplished through effective communications. The point was forcefully made at the outset that effective communications requires precise decisions regarding who to communicate with, how to communicate, when to communicate, and where to communicate.

The case studies presented herein dealt only with the problems involved in readying the first submarines in SUBLANT to carry and fire the MK-48 torpedo, as a prelude to Fleet Introduction. The cases dealt only with specific hardware problems, the time span was limited to happenings which occurred between October 1969 and December 1970, and the program view was limited to the Fleet's perspective of relevant happenings. Nevertheless, the related manifold events, problems, decision, interactions, etc. are representative of the who, how, when, and where communication decisions facing Fleet Introduction of any weapons system, in any area of the process. Complexity increases with major systems, but the essence of the interplay phenomena and the need to deal with it are ever present, regardless of system complexity. The lessons to be learned concerning that need focus on the obvious requirement for coordinated communications: Namely, the whos, the hows, the whens, and the wheres.

The authors believe that, on the basis of the six case studies presented, it is possible to draw specific conclusions regarding project communications requirements and to point to specific ground rules to be followed for the introduction of any major weapons system. Before making any such attempt, however, the authors wish to quickly allude to the fact that, in addition to any fundamental ground rules identified for project communications, there are other lessons to be learned. Very obviously, each facet of the Fleet Introduction process merits study.

These other lessons, communications notwithstanding, involve such factors as management rationale, the ramifications of decisions, and the effect of the actions taken or not taken to deal with problems in each area. In the case of the Fleet Introduction of the MK-48 torpedo, many of these other lessons remain to be learned. For example, consider the following areas:

The MK-48 MOD-1 Torpedo itself. The issues relevant to the torpedo involve: inventory goals, controls, and constraints; interface problems encountered with shipboard launcher equipments; shelf life and "turnaround"[14] requirements; shipboard safety manifestations; logistic support requirements and difficulties; security; reliability; and maintainability.

---

[14] Torpedo "turnaround" refers to how often a torpedo must be returned to a torpedo workshop, ashore or on a tender, to be recycled and re-issued as a refurbished, ready for launch weapon.

MK-48 MOD-1 Torpedo Retrievers. Torpedoes fired as exercise units, MK-27 MTT's as well, must be recovered after launch. Special retrieval equipment and vehicles were/are required for on range and open ocean firings to deal with varying weather conditions and exercise requirements. Boats, helicopters, and ships are potential retrieval platforms. The evolution of the MK-48 torpedo and the MK-27 MTT retrieval systems has been unique, and the lessons to be gleaned are manifest.

The MK-27 MTT's. This area is almost as fertile for case study development as the torpedo itself.

MK-48 Tender Workshops and Magazine Stowage. This subject is extremely relevant to the successful deployment and support of the MK-48 torpedo. It is likewise a complex area, well suited for case study development. Many lessons could be learned from study of this effort.

Shipboard Loading and Handling. The evolution of the required SHIPALTS and the problems encountered beyond the BERGALL experience described in Case (F) are subjects replete with lessons still being learned. This program has been frought with difficulties and management challenges.

Submarine Fire Control. Tracing the resolution of the many problems facing alteration of submarine fire control systems would provide a classic case study opportunity. The problems in this area exposed in this series of cases were followed by others. And, the successful solutions to these problems have since led to a well managed alteration program.

Training/Exercise Firing. The steps which led to the development of the "MK-48 Training and Certification Program" would provide another classic case study opportunity. The coordination of the many players and the departure from the traditional torpedo introduction efforts were significant.

MK-48 Shore Facility Workshops and Magazines. This area was explored in great depth by the authors. Regretably, time constraints precluded case study development. Nevertheless, the authors will address this area to illustrate the potential that it, and all of the other above mentioned areas lends to possible case study development.

The authors spent many hours researching the COMSUBLANT archives and interviewing present and past members of the COMSUBLANT, PMO, NUSC, Newport, and NAVORDSYSCOM staffs. Several pertinent and causative details were recorded. There was, in turn, disclosure of the following five key events and/or determinants that were to be further developed into a case study. They are as follows:

1. The inability to activate the already constructed Norfolk MK-48 workshop because the selected torpedo warhead yield exceeded the safe explosive quantity/distance ratio for the area's population density. The workshop was planned and built to accommodate the MK-48-0 with the smaller warhead.

2. The essentially last minute inability to activate the Charleston workshop on schedule, as planned, because of a contract that, somehow, was never negotiated, as

required, to effect the internal structural changes necessary in order to accept the MK-48-1 torpedo workshop test and handling equipment.

3. The fact that the high priority assigned to MK-48 TWS development with CNO, NAVORD, NAVSHIPS, and other involved commands and agencies had no apparent effect on the priority assigned to construction of the MK-48 workshop buildings, which fell under the cognizance of NAVFAC. Investigation revealed that the building contract administrators and the Resident Officers in Charge of Construction (ROICC)[15] apparently assigned building construction priorities based solely on cost. Hence, any other building undergoing construction on station that cost more than a MK-48 workshop that was undergoing construction on the same station would axiomatically have higher priority for construction. The inability of the PM to effect MK-48 workshop construction on a priority commensurate with other components of the weapons system appeared to be quite paradoxical.

4. The tardy activation of the New London facility, with a long list of waivers, appeared to be the result of inadequate attention to detail in the initial activation planning and supervision effort.

---

[15] Civil Engineering Corps. (CEC) officer assigned to a Naval Station responsible for overall supervision of station construction projects.

5. The availability of real estate and the aforementioned quantity/distance requirements reportedly forced the construction of one of the New London facilities in the middle of an old stone quarry and the other in the middle of a previously swampy area. The former endured a rather traumatic engagement with periodic rockslides until the quarry walls were reinforced with concrete, and the latter is plagued by leaks and wetness. In fact, some of the people interviewed are convinced that the latter facility is literally sinking.

Based upon the above discussion and examples, the authors strongly endorse follow-on effort to further research and develop case studies involving the MK-48 TWS. And, while the above subjects are viewed as being related to Fleet Introduction, it is suggested that the MK-48 Program's scope provides considerable room for case study effort in several areas other than Fleet Introduction.

Returning, then, to the thesis that it is possible to draw specific conclusions regarding project communications requirements and to point out specific ground rules to be followed for the introduction of any major weapons system, the authors feel safe in assuming that any student of the presented case studies would agree that the requirement for Fleet involvement is a foregone conclusion. This is not to say that many would agree as to the degree of involvement, or how and when such involvement should occur. Accordingly, the authors submit the following specific conclusions and recommendations:

CONCLUSION: A Project Manager's Staff is not generally organized to coordinate the detailed steps necessary for introducing new hardware at the Fleet level. Further, the PM's Staff does not have the means to maintain on the job supervision of interface efforts in the Fleet.

RECOMMENDATION: The Project Manager and his Staff must recognize the "Customer" position of the Fleet and organize to effectively deal with it: Namely, the PM should ensure that his Staff includes a Fleet Liaison Officer. That officer should be well versed and familiar with the Fleet community concerned. He should be formally chartered to interface with an assigned Fleet representative(s) (i.e., a Project Officer on the Type/Force Commander's Staff), from the date the project is designated and a PM is assigned. As the PMO is reorganized to cope with the project's progression through the various phases, the Fleet Liaison Officer's role must be continued. And, as the project approaches Fleet Introduction, the Fleet Liaison Officer should be provided the required staffing to permit sustained, in field efforts to supervise the details of each facet of the Fleet Introduction effort.

CONCLUSION: The Type/Force Commander's Staff is not functionally nor by traditional attitude or circumstance suited to interface formally with a Project Office. Officers assigned to Operational Staffs, in general, are too wrapped up in the daily exigencies of operations and existing hardware problems to devote extensive time and effort to the development of new hardware.

RECOMMENDATION: The Type/Force Commander and his Staff must recognize its "Customer" position and the "Producer" position of the PMO and organize to effectively deal with it: Namely, the Type/Force Commander should ensure that his Staff includes a Project Officer for each major project that is destined to interface with the units he commands. Each Project Officer should be on an equal footing with the heads of Staff functional offices. This suggests that he should be a Navy Captain with a charter permitting him to act across functional lines with the authority of the Commander, as necessary to acquire the degree of functional support required to effectively represent and support the Fleet's interests in all project matters. The Project Officer should be assigned concurrently with the PMO's Fleet Liaison Officer, and a formal communications link should be established at that time and sustained throughout the development process and Fleet Introduction. Where the command has a counterpart on the opposite coast, as is usually the case, or there is more than one Type/Force Commander involved, a concensus should be reached on all appropriate matters so that a single face can be presented to the PMO. Furthermore, the onus rests with the Type/Force Commander to ensure that it is clear to all other commands dealing with his Staff on project related matters that they must deal with one, and only one, point of contact -- his Project Officer. Hand-in-hand with this responsibility is the requirement to ensure that the Project Officer is truely authorized to speak for the

Commander in all project related matters. What's more, the Type/Force Commander must ensure that the other commands recognize this fact. It goes without saying, then, that selection of an individual to fill a Project Officer position is not a matter to be treated lightly. The authors recognize that there are those who consider the cost of such an effort exorbitant or, at least, not in line with what they consider is required. To those who feel this way the authors can only suggest that it is a small price to pay when viewed in perspective with the long lived effects of inactions or wrong decisions made during the development and Fleet Introduction processes.

CONCLUSION: Neither the PM nor the Type/Force Commander possess the degree of authority necessary to effect all decisions that may be in the best interest of the project. This is due to the fact that other major commands, for a variety of reasons, may not agree with their decisions. In some instances, neither the PM nor the Type/Force Commander may be in the position to fund an action that would be in the best interest of the project.

RECOMMENDATION: All major projects should have a central forum, a court of appeals if you will, for carrying the needs of the project to the CNO so that final and effective decisions can be made in areas beyond the authority of the PM or Type/Force Commander. For this purpose, it is recommended that the CNO's Project Sponsor chair a coordination group, similar to the present PCG, and that the key membership be

limited to the PM, the Type/Force Commanders, and, perhaps, one or two agencies acting in major support roles for the PM. All decisions regarding funding or policy beyond the authority of the PM and the Type/Force Commanders can, through this forum, be referred to the CNO for action. Once a decision has been made, the CNO can task and/or fund other commands, as appropriate, such as NAVSEA, to take action to support the decision.

CONCLUSION: There are presently no ground rules, directions, or check off lists available to guide PM's or their Staffs and field agencies regarding Fleet/project interface efforts. This has led to irritations, misunderstandings, lack of proper guidance, bypassing of key personnel, mutual on the job interference, and unsatisfactory installation/testing efforts.

RECOMMENDATION: All projects that will require interface with the Fleet should be required to publish formal ground rules setting forth and providing guidance regarding step-by-step procedures for effecting Fleet liaison and subsequent hardware or software interface. Specific individual responsibility should be assigned in each instance, and requirements for necessary ship checks, meetings, integrated work packages, and specific Fleet liaison should be standardized for all such efforts.

ORIGINAL PROGRAM ORGANIZATION

1962 Initial Organization

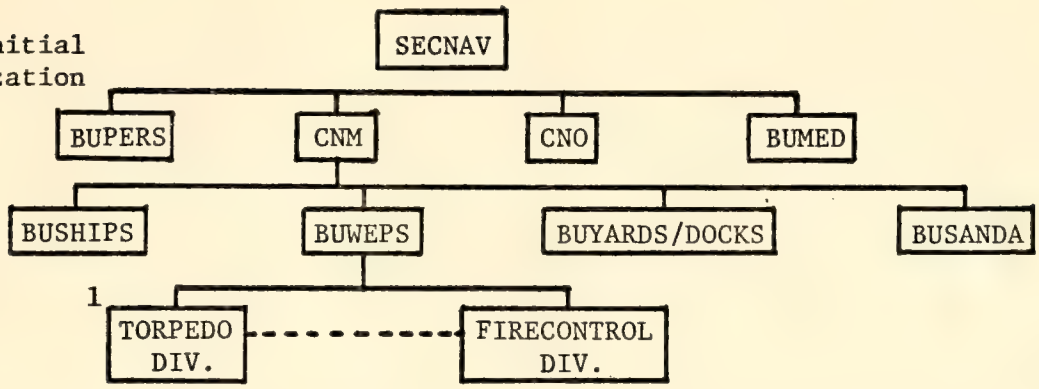

1 The EX-10 (MK-48) Torpedo Project Officer was the BUWEPS Torpedo Division Head. The EX-10 was another functional responsibility with the division. Two men were assigned responsibility for the project.

December 1966
After Navy's Reorganization (See Appendix VII PMO, Contractors' and Government Agencies' Relationships)

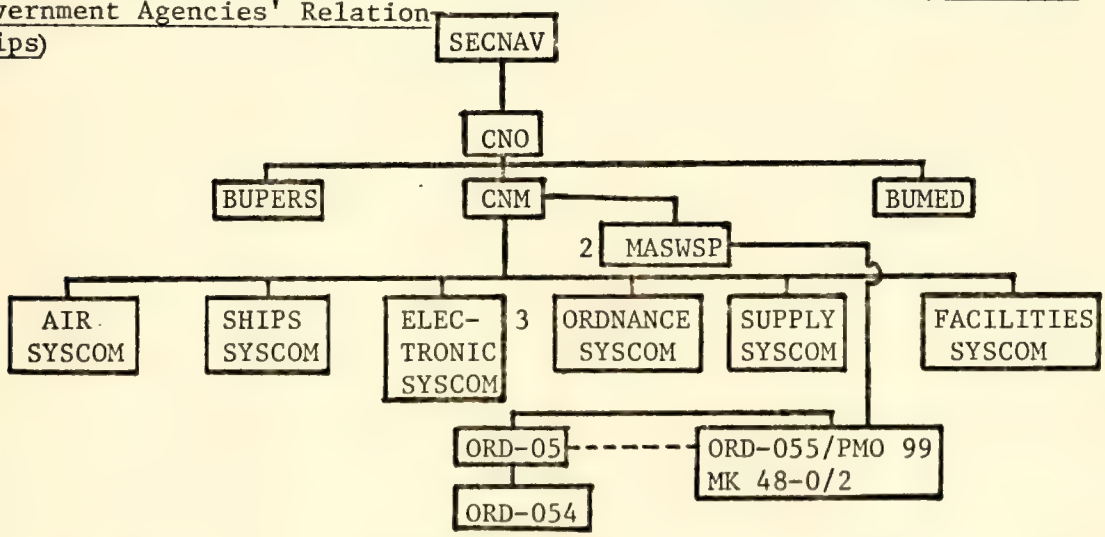

2 PMO 99 reported to ORDNANCE SYSCOM for technical aspects of the project, including design, development, production and support responsibilities.

3 PMO 99 reported to MASWSP for coordination and integration of MK-48 into the overall Navy ASW effort. Reports included approval of schedules, funding, system integration and program monitoring.

Exhibit 1 Original Program Organization Chart

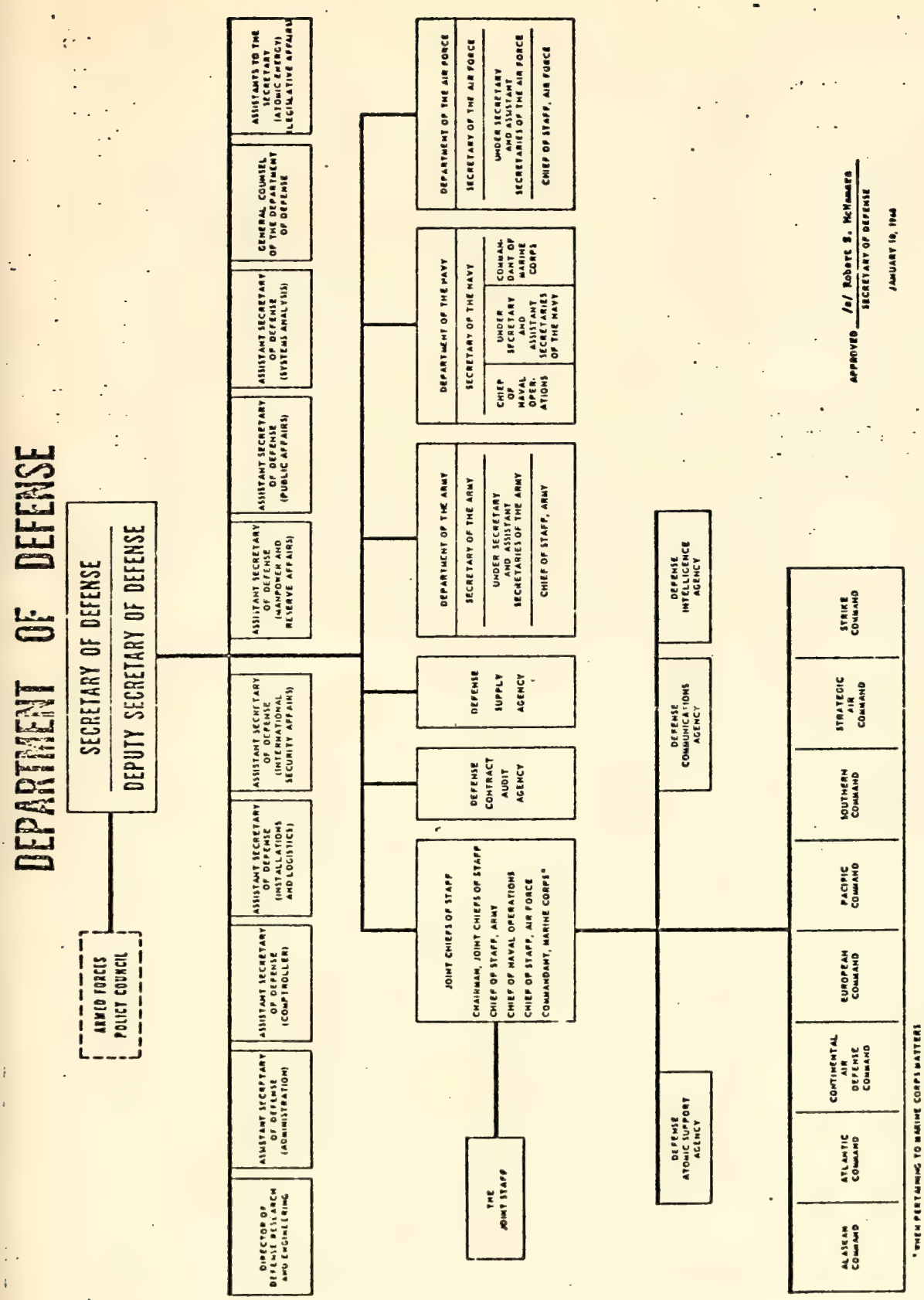

Exhibit 2 Department of Defense Organization Chart

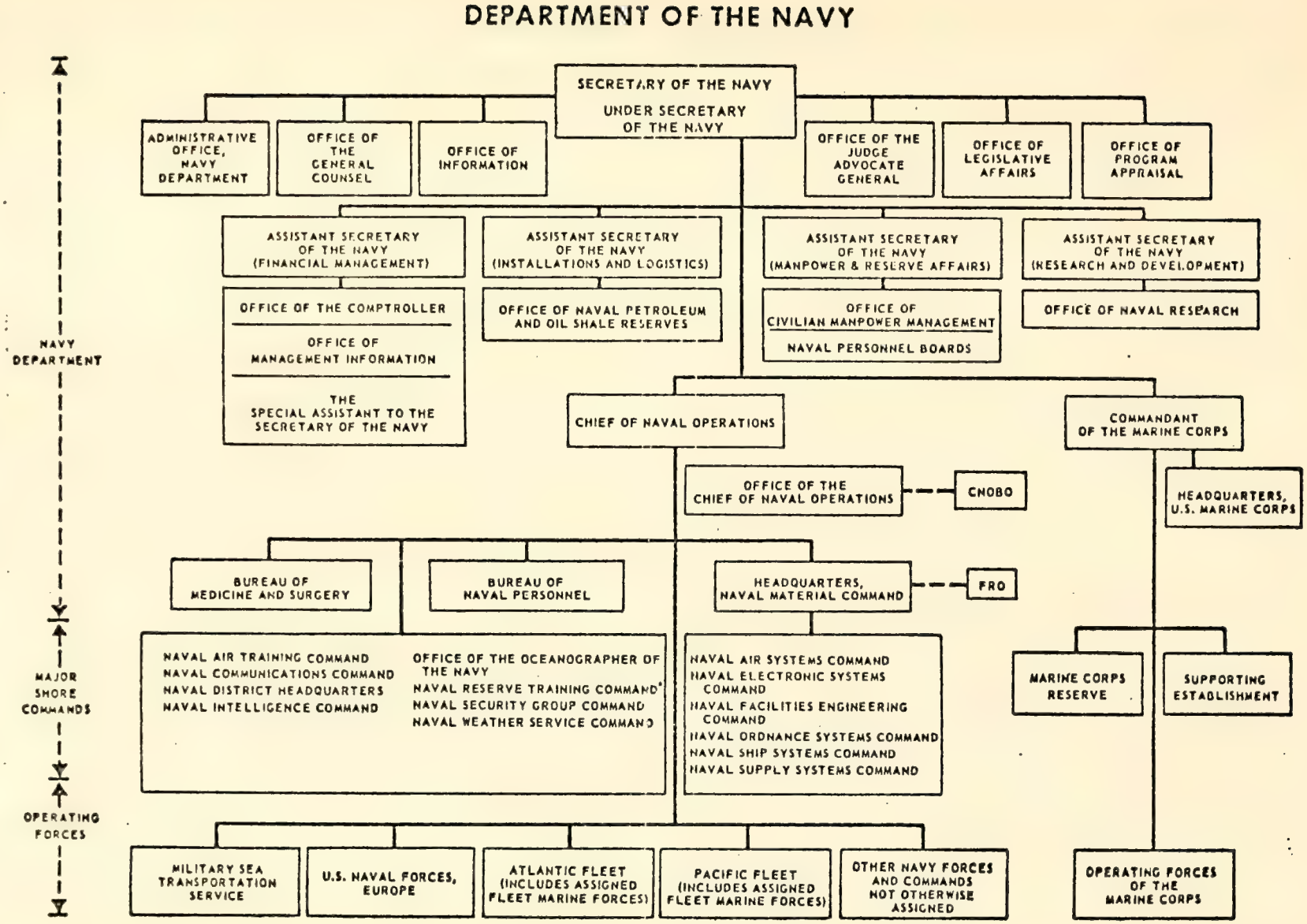

Exhibit 3 Department of the Navy Organization Chart

NAVAL MATERIAL COMMAND

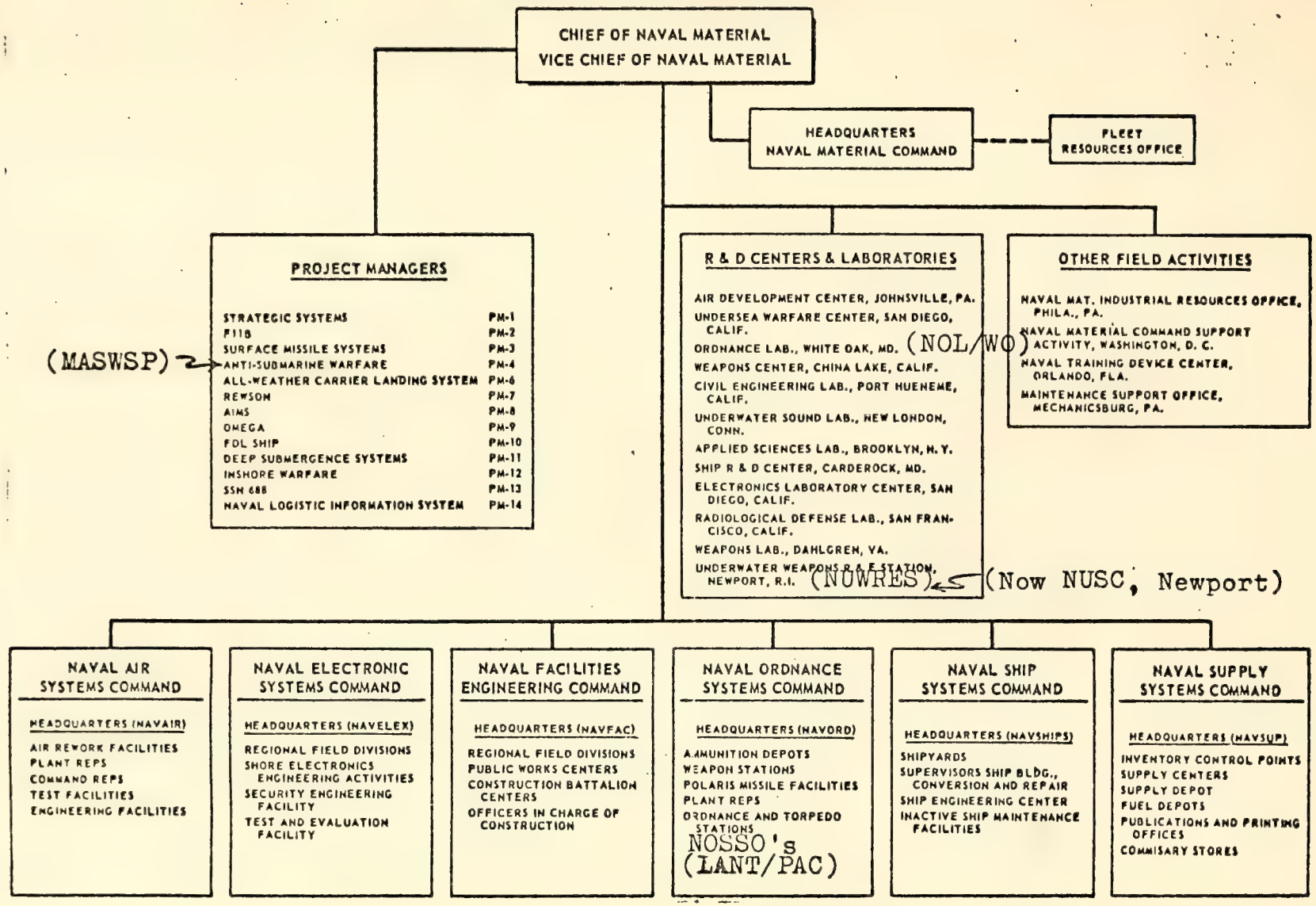

Exhibit 4 Naval Material Command Organization Chart

SPRING 1968 "Dual Effort"
PMO Organization Chart

August 1967 - February 1970

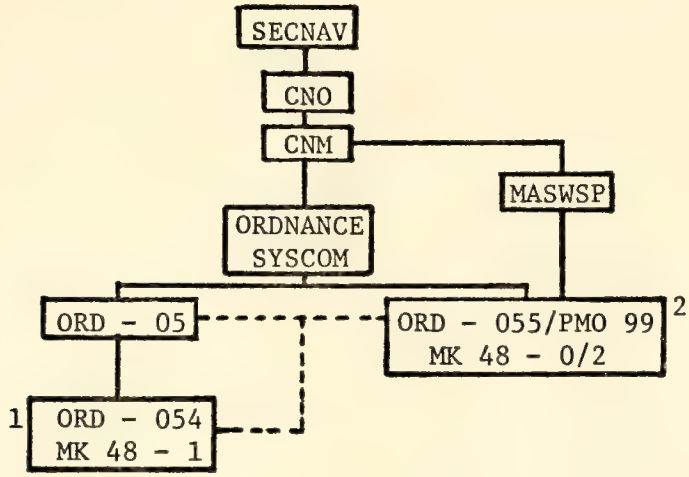

1 MK 48 - 1 Program Management stated in the existing ORDNANCE SYSCOM Torpedo Division ORD - 054, in August 1967.

2 ORD - 055/PMO 99 became PMO 499 in February 1969.

MK 48 "Dual Effort"
Management Relationships

Spring 1968

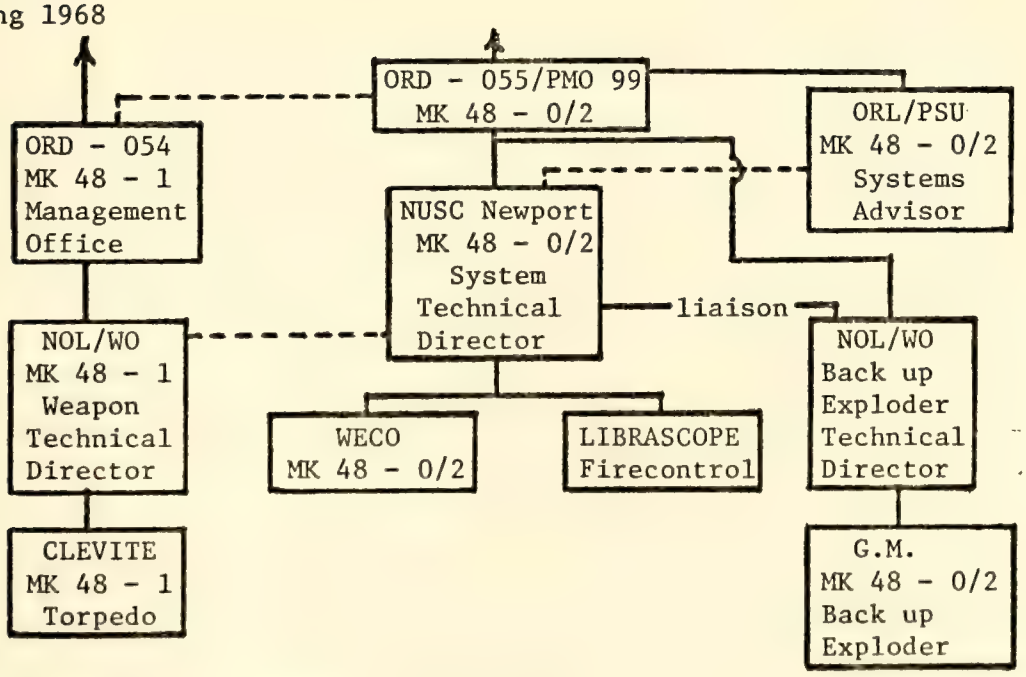

Note: symbol - - - - means "coordination".

Exhibit 5 Spring 1968 "Dual Effort" PMO Organization Chart

Summer 1971 "Post Competition"
PMO Organization Chart

August 1971
(Post Selection)

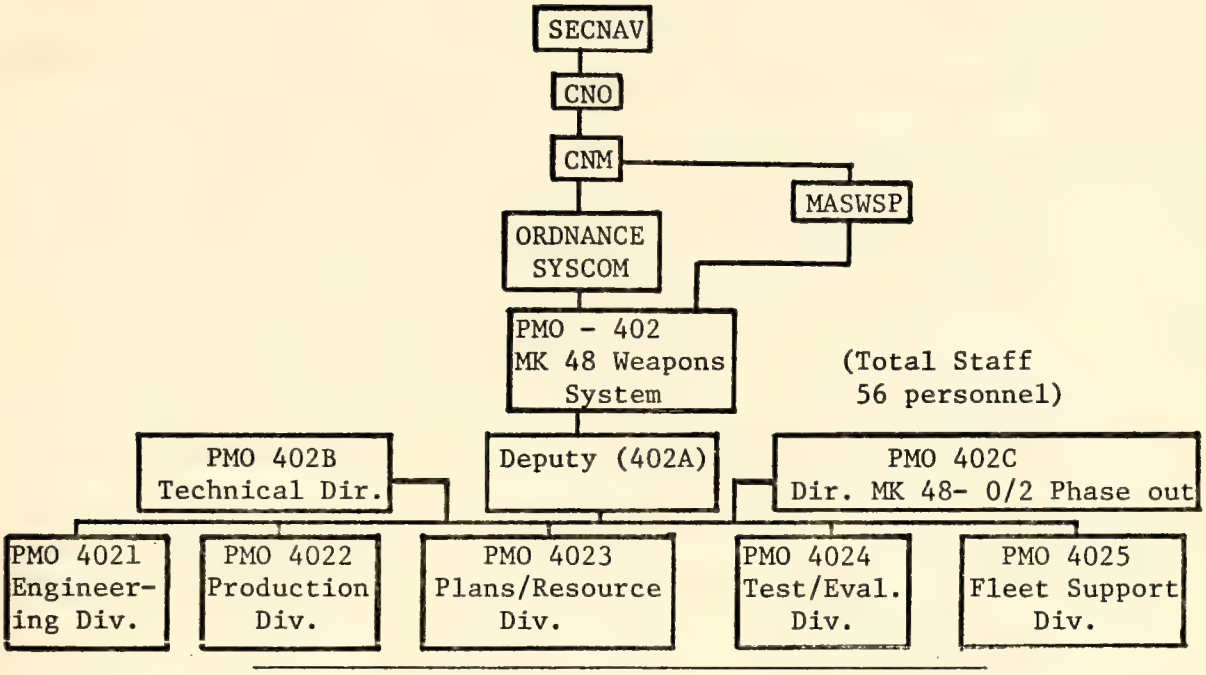

PMO Organization During
Selection Test Program

February 1970 - July 1971

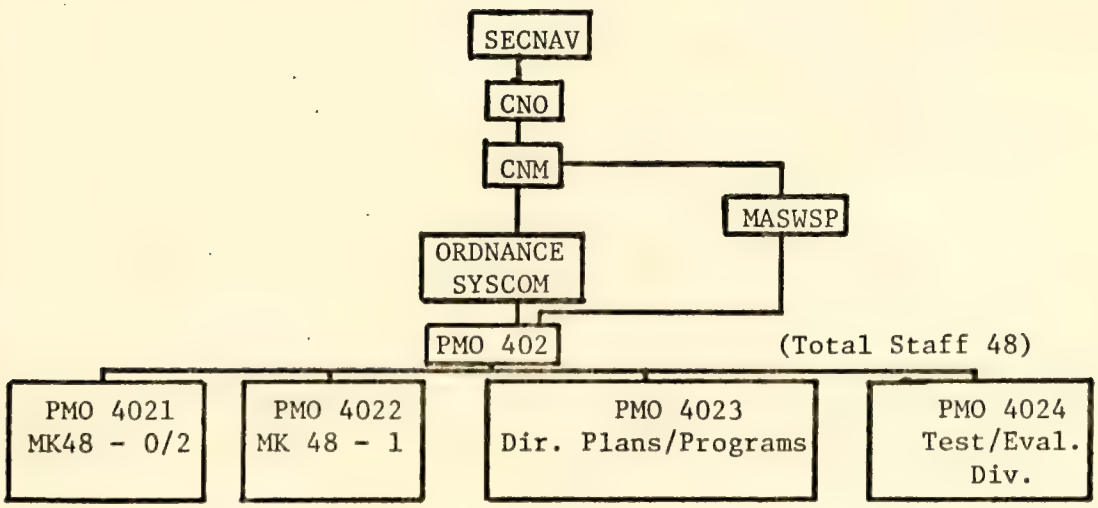

Exhibit 6 Summer 1971 "Post Competition" PMO Organization Chart.

MK-48 PROGRAM COORDINATION GROUP (PCG)
MEMBER ORGANIZATIONS

The MK-48 PCG was established in August 1966; members were:

Chairman: Office of CNO* (OP-951E), Head Sub-Surface Branch, Technical Appraisal and Requirements Division of ASW Programs.

Members: Office of CNO:

* OP-312D. Head Weapons Systems and Readiness Section, Submarine Warfare Division.
  OP-090C2, Assistant to Director Navy Program Planning.
  OP-713C, Assistant Head Strategic and Submarine Warefare Branch, Undersea Warfare and Ocean Surveillance.
  OP-322D2, Assistant for Surface Weapons, ASW and Ocean Surveillance Division.
* MK-48 Torpedo Project Officer (MK-48-0/2).
* NUSC, Newport (NUWRES) MK-48 Program Shipboard Equipment Technical Director.
* ORL Pennsylvania State University, MK-48 Technical Director.
* BUPERS Submarine Personnel Program Manager.

The MK-48 PCG Membership in August]968 was:

Chairman: Head Submarine Warfare Branch, Undersea and Strategic Warfare Division, (OP-713)

Members: Same as * members from above plus following new members.

MK-48-1 Torpedo Project Officer.
MASWSP (ASW-113), Head Submarine Systems Plans Branch.
COMSUBDEVGRU TWO (Chairman Fleet Firing Sub Group).
NAVMAT (MAT-0322), Head, ASW Systems Development Branch.
COMSUBLANT Force Weapons Officer.
COMSUBPAC Force Weapons Officer.
OP-322C1, Assistant for Surface Weapons, ASW and Ocean Surveillance Division.
COMOPTEVFOR Staff Representative.
COMCRUDESLANT ASW Weapons Officer.
Naval Safety Center (Chairman Safety Sub Group).
COMASWFORPAC Weapons Officer.
COMCRUDESPAC ASW Weapons Officer.
NAVFAC (Code- 20211) Assistant Master Plans Branch.
NAVSHIPSYSCOM Senior Project Engineer of SSN New Construction.

Note: PCG meetings were normally attended by a variety of other organizations (non-members) involved in MK-48 Weapons System Development. Their attendance was solicited when matters affecting their areas of responsibility were to be addressed.

Exhibit 7 MK-48 Program Coordination Group Membership

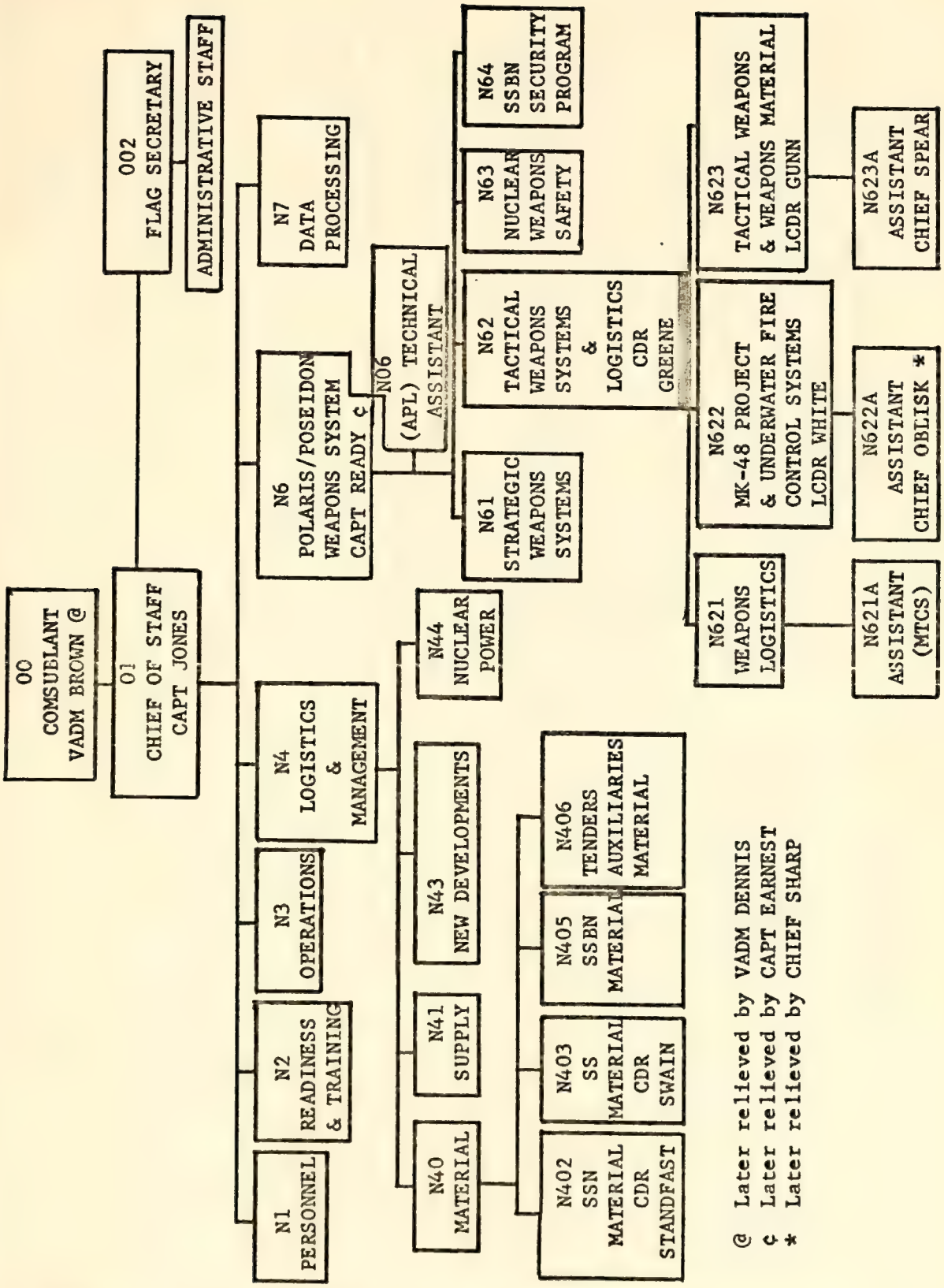

Exhibit 8 Force Weapons Office Relationship Within COMSUBLANT Staff Organization

Exhibit 9 Force Weapons Office Layout

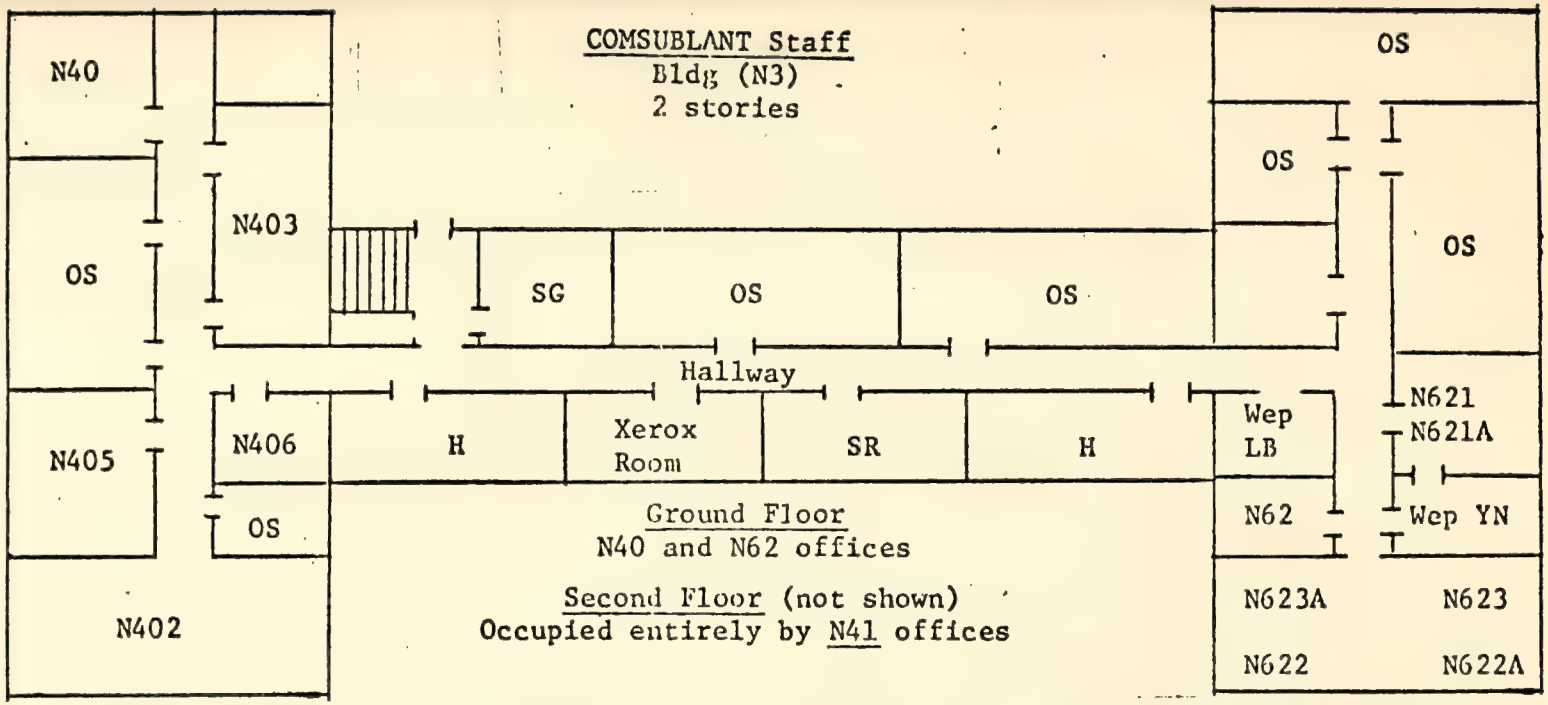

Bldg N3 housed the COMSUBLANT Material (N40), Logistics (N41), and Conventional Weapons (N62) staff codes. This building was located at the Naval Operating Base (NOB), Norfolk, Virginia, and was 4 1/2 miles removed from COMSUBLANT Headquarters Bldg (NH5) which was located within the Commander in Chief Atlantic Fleet compound. N6, CAPT Ready (later CAPT Earnest), was located in Headquarters.

Key	
N40	Material Officer
N402	Nuclear Submarine Material Officer
N403	Diesel Submarine Material Officer
N405	Polaris Submarine Material Officer
N406	Tender/Auxiliary Material Officer
OS	Other N40 office space
H	Head
SG	Security Guard
N41	Supply & Logistics Officer

Key cont.	
Wep LB	N62 Weapons Technical Library
N62	Force Weapons Officer - CDR Greene
N621	Nuclear/Conv Weapons Logistics Office
N622	Fire Control/MK-48 Program Office (Jim White)
N623	Conventional Weapons Office (LCDR Gunn)
N621A	Logistic Assistant (MTCS)
N622A	Fire Control Assistant FTCS - Oblisk (1)
N623A	Conventional Weapons assistant TMCS - Spear

(1) Later relieved by Chief Sharp

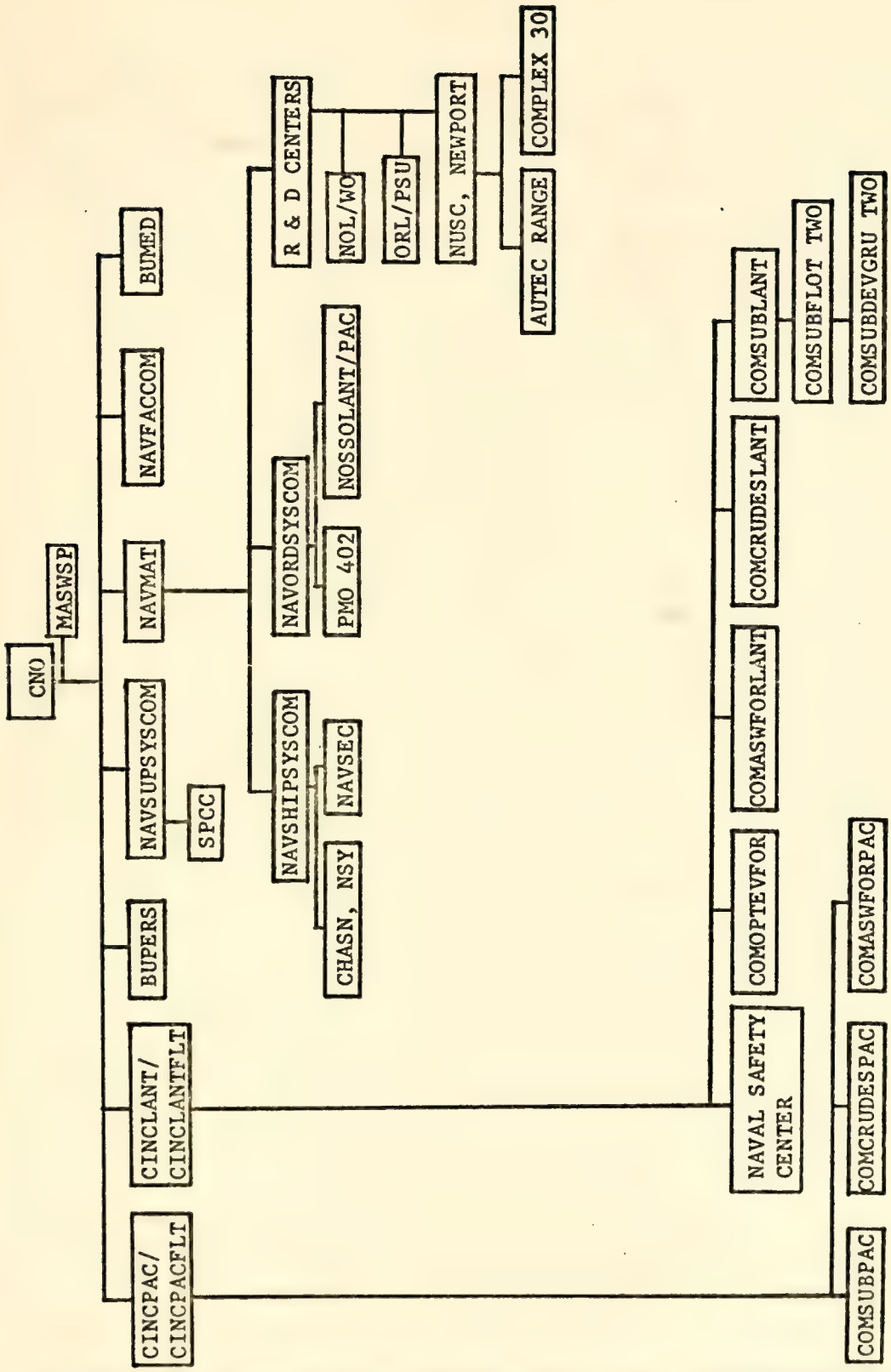

Exhibit 10 Orgnaizational Relationship Between COMSUBLANT Staff and Other MK-48 Involved Commands

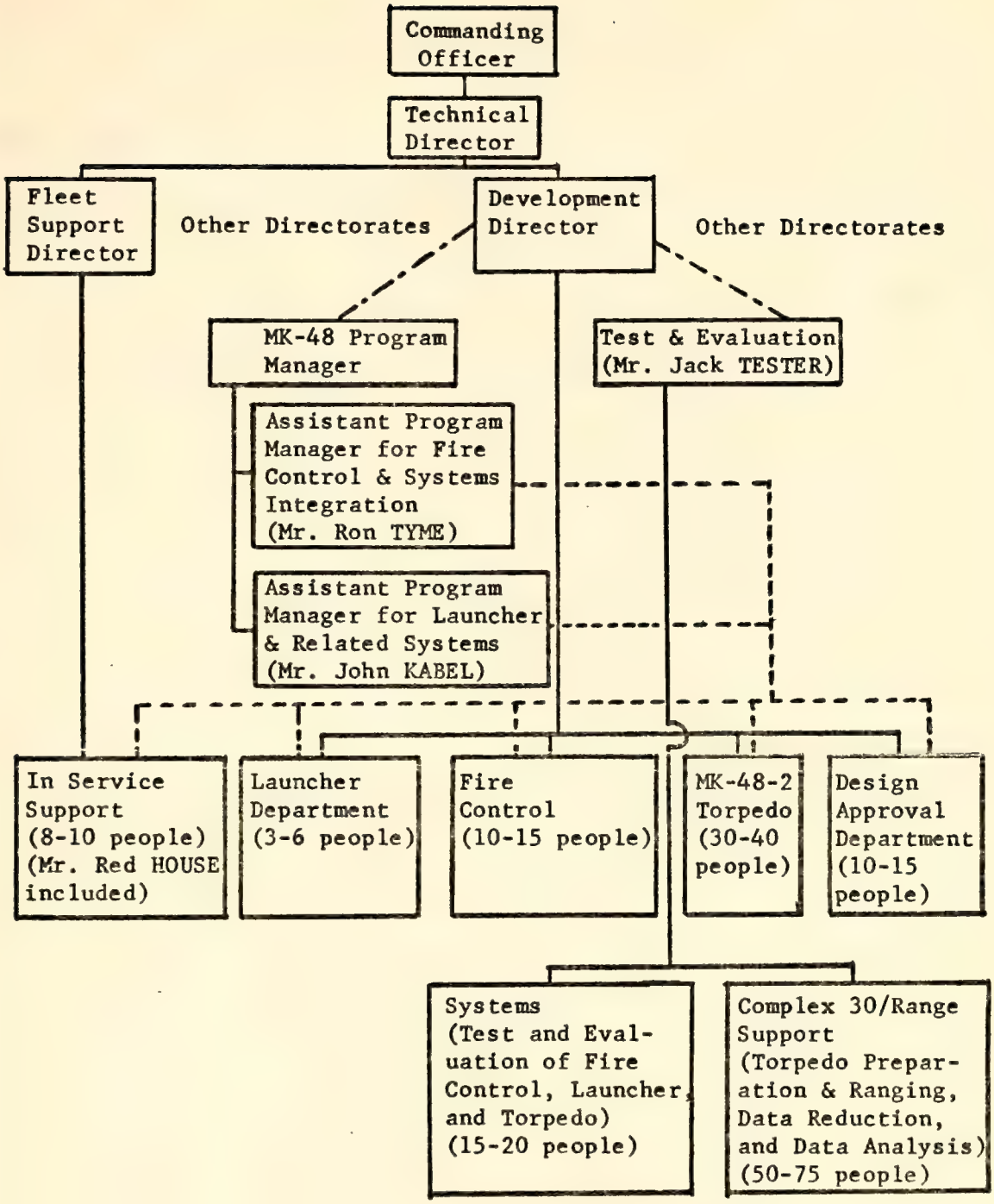

Note: ———— Denotes Functional Control
- - - - - - Denotes Program Management Matrix Relationship
—.—.—.— Denotes Staff Relationship

Exhibit 11 MK-48 Involved Portion of NUSC, Newport Organization

Organizational Relationship
Between
COMSUBLANT Staff and PMO

February 1970 - July 1971

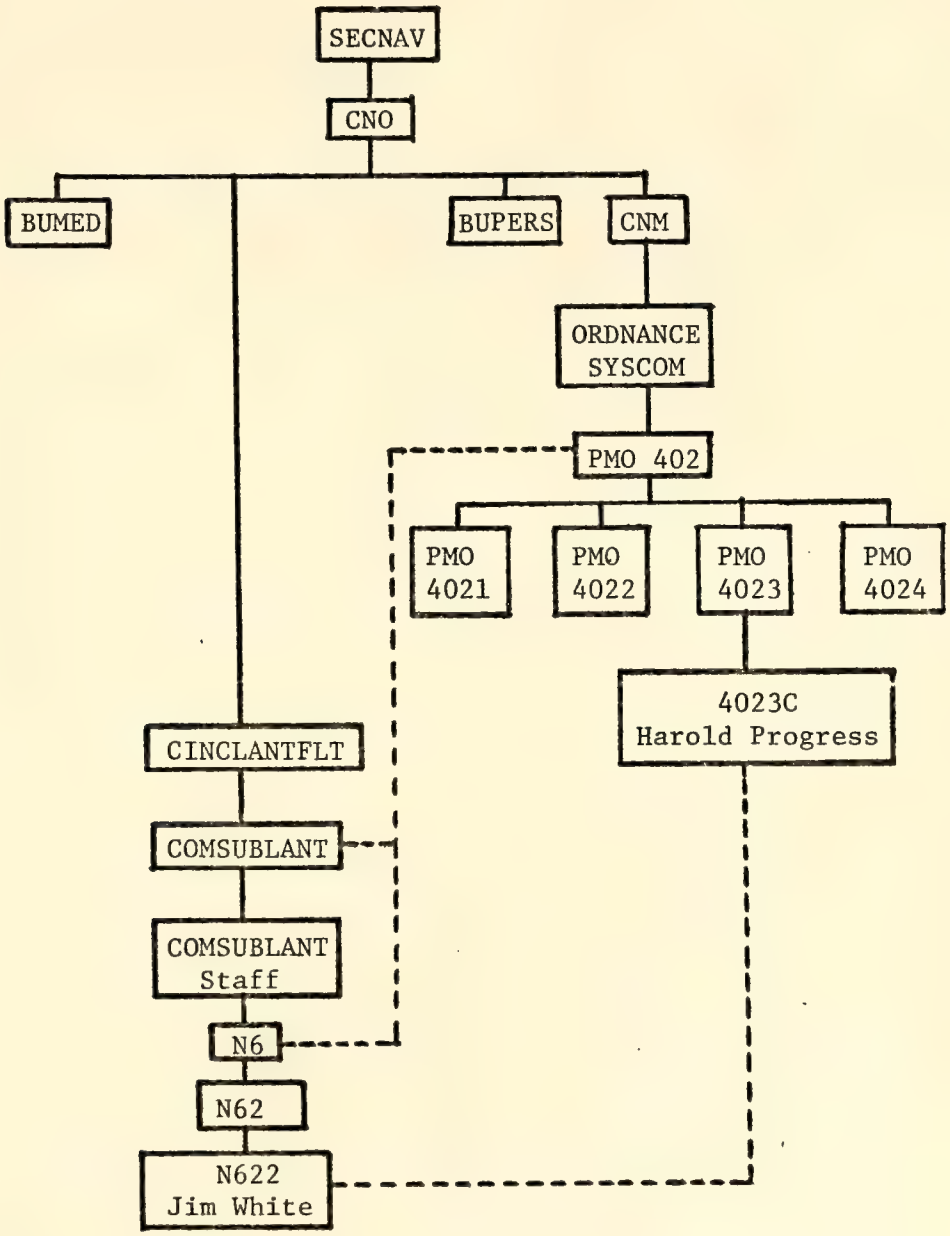

——— Formal Chain of Command
- - - - Primary Informal Interfaces

Note: See Exhibits 2, 3, 4, 6 and 10 for additional detail regarding organizational relationships.

Exhibit 12 Organizational Relationships Between COMSUBLANT Staff and the PMO.

Exhibit 13 SUBLANT Organization

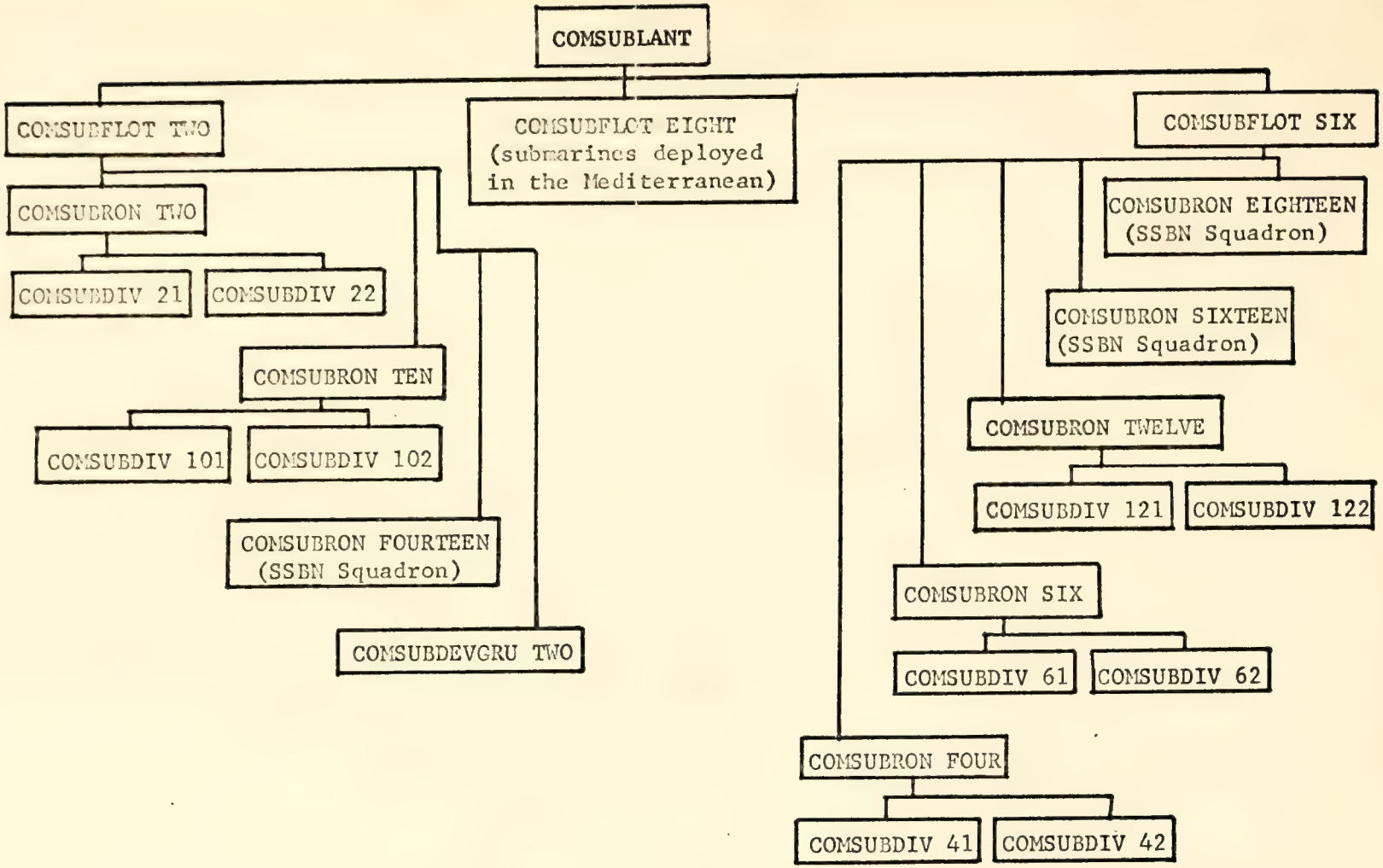

SUBLANT Organization During the Period 1969-1971

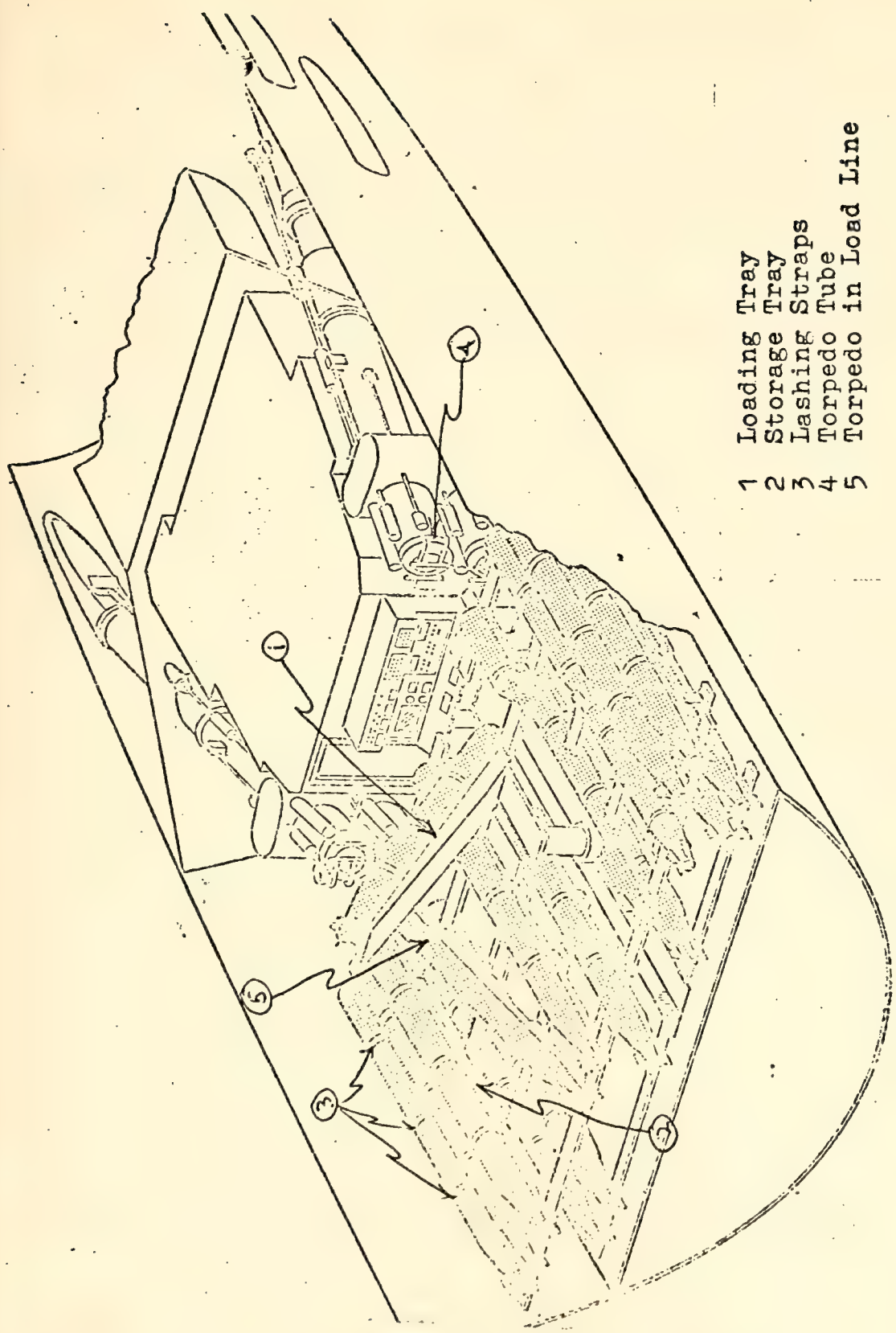

Exhibit 14 Typical Submarine Torpedo Room

APPENDIX I

ACRONYM LIST

ABC - Atomic, Biological, and Chemical

ACOS - Assistant Chief of Staff

ADP - Automatic Data Processing

APL - Applied Physics Laboratory, Johns Hopkins University

APL - Allowance Parts List

AS - Submarine Tender

ASAP - As soon as possible

ASR - Submarine Rescue Vessel

ASTOR - Anti-Submarine Torpedo

ASW - Anti-Submarine Warfare

AUW - Advanced Underwater Weapons

BUMED - Bureau of Medicine and Surgery

BUPERS - Bureau of Naval Personnel

BUSANDA - Bureau of Supply and Accounts

BUSHIPS - Bureau of Ships

BUWEPS - Bureau of Weapons

BUYARDS & DOCKS - Bureau of Yards and Docks

CAPT - Captain

CDR - Commander

CHASN - Charleston, South Carolina

CHASN,NSY - Charleston Naval Shipyard, Charleston, South Carolina

CHNAVMAT - Chief of the Naval Material Command

CINCESTLANT - Commander in Chief Eastern Atlantic

CINCLANT - Commander in Chief Atlantic

CINCLANTFLT - Commander in Chief, U.S. Atlantic Fleet

CINCPAC - Commander in Chief Pacific

CINCPACFLT - Commander in Chief, U.S. Pacific Fleet

CLEVITE - CLEVITE Corporation (later became Ocean Systems Division of GOULD INC.)

CNM - Chief of the Naval Material Command

CNO - Chief of Naval Operations

COMASWFORLANT - Commander, Anti-Submarine Forces Atlantic

COMASWFORPAC - Commander, Anti-Submarine Forces Pacific

COMCRUDESLANT - Commander, Cruiser Destroyer Force Atlantic

COMCRUDESPAC - Commander, Cruiser Destroyer Force Pacific

COMFIVE - Commandant of the Fifth Naval District

COMOPTEVFOR - Commander Operational Test and Evaluation Forces

COMSUBACLANT - Commander Allied Submarine Command Atlantic

COMSUBDEVGRU TWO - Commander Submarine Development Group Two

COMSUBDIV _____ - Commander Submarine Division _____

COMSUBFLOT _____ - Commander Submarine Flotilla _____

COMSUBLANT - Commander Submarine Force Atlantic

COMSUBPAC - Commander Submarine Force Pacific

COMSUBRON _____ - Commander Submarine Squadron _____

COMSUBWESTLANT - Commander Submarine Forces Western Atlantic

COMTAC - Communications and Tactical

COSAL - Consolidated Shipboard Allowance List

COSMIC - NATO TOP SECRET

COT - Consolidated Operability Tests

CP - Cost Plus Contract

CPFF - Cost Plus Fixed Fee Contract

CPI - Cost Plus Incentive Contract

CPO - Chief Petty Officer

DCOS - Deputy Chief of Staff

DDAS - Digital Data Acquisition System

DEVGRU TWO - Submarine Development Group Two

DOD - Department of Defense

DPT - Development Prototype Torpedo

DRL - Defense Research Laboratory, University of Texas

DSARC - DOD Defense System Acquisition Review Council

ECM - Electronics Countermeasures

EVAL - Evaluation

FAM - Basic Familiarization Training

FBM - Fleet Ballistic Missile

FBMTC - Fleet Ballistic Missile Training Center

F/C - Fire Control

FEC - Field Engineering Change

FORACS - Fleet Operational Readiness Accuracy Calibration Station

FPI - Fixed Price Incentive Contract

FPIF - Fixed Price Incentive Fee Contract

FSTC - Fleet Submarine Training Command

GD - General Dynamics Corp.

GE - General Electric Corp.

GM - General Motors Corp.

GUPPY - Greater Underwater Propulsion Power

HELO - Helicopter

IAPL - Interim Allowance Parts List

ICP - Inventory Control Point

ISEA - In Service Engineering Agent/Activity

LANTFLT NAVFACOM - Atlantic Fleet Naval Facilities Command

LCDR - Lieutenant Commander

LIBRASCOPE - Singer Librascope Co.

LT - Lieutenant

3M - Maintenance and Material Management

MASWSP - Manager, Anti-Submarine Warfare Systems

MCPOC - Command Master Chief Petty Officer

MRC - Maintenance Requirements Cards

MTCS - Senior Chief Missile Technician

MTT - MK-27 Mobile Torpedo Target

NATO - North Atlantic Treaty Organization

NAVAIRSYSCOM - Naval Air Systems Command

NAVFAC - Naval Facilities Command

NAVFACOM - Naval Facilities Command

NAVMAT - Naval Material Command

NAVMATCOM - Naval Material Command

NAVORD - Naval Ordnance Systems Command

NAVORDSYSCOM - Naval Ordnance Systems Command

NAVORDSYSUPOLANT - Naval Ordnance System Support Office Atlantic

NAVSEC - Naval Ship Engineering Center

NAVSHIPS - Naval Ships Systems Command

NAVSHIPSYSCOM - Naval Ships Systems Command

NAVSUP - Naval Supply Systems Command

NAVSUPSYSCOM - Naval Supply Systems Command

NEC - Navy Enlisted Classification Code

NLON - New London, Connecticut

NNSBDDCO - Newport News Shipbuilding and Dry Dock Co.

NORVA - Norfolk, Virginia

NOS/IH - Naval Ordnance Station, Indian Head, Maryland

NOSSO - Naval Ordnance System Support Office

NOSSOLANT - Naval Ordnance System Support Office Atlantic

NSRDC - Naval Ship Research and Development Center

NOSC - Naval Underwater Systems Center, Newport, Rhode Island (formerly NUWRES)

NUSC, Newport - Naval Underwater Systems Center, Newport, Rhode Island (formerly NUWRES)

NUWC - Naval Undersea Warfare Center, Pasadena, California

NUWRES - Naval Underwater Research and Evaluation Center, Newport, Rhode Island (now NUSC, Newport)

OPLAN - Operations Plan

OPNAV - Office of the Chief of Naval Operations

OPORD - Operations Order

OP ORDER - Operations Order

OPTEVFOR - Operational Test and Evaluation Forces

ORDALT - Ordnance Alteration

ORI - Operations Research Inc.

ORL/PSU - Ordnance Research Laboratory, Pennsylvania State University

OSD - Office of the Secretary of Defense

PAO - Public Affairs Office

PCG - MK-48 Program Coordination Group

PCO - Prospective Commanding Officer

PIP - Personnel Information Program

PM - Project Manager

PML - Peat, Marwick, and Livingston

PMO - Project Manager's Office

POS - Project Office Staff

PPT - Production Prototype Torpedo

PXO - Prospective Executive Officer

RAV - Restricted Availability

RDF - Radio Direction Finding

REP - Representative

RPS - Registered Publications System

SACLANT - Supreme Allied Command Atlantic

SAIL - Ship's Armament Inventory List

SECNAV - Secretary of the Navy

SHIPALT - Ship Alteration

SITREPS - Situation Reports

SOAC - Submarine Officer Advanced Course

SOAP - Supply Operations Assistance Program

SOBC - Submarine Officer Basic Course

SOIC - Submarine Officer Intermediate Course

SPCC - Ship's Parts Control Center, Mechanisburg, Pennsylvania

SS - Diesel Submarine

SSBN - Nuclear Fleet Ballistic Missile Submarine

SSN - Nuclear Fast Attack Submarine

STP - Selection Test Procedure

SUBASE E&R - Engineering and Repair Department of the U.S. Naval Submarine Base, New London, Connecticut

SUBASE, NLON - U.S. Naval Submarine Base, New London, Connecticut

SUBDEVGRU TWO - Submarine Development Group Two

SUBLANT - Atlantic Submarine Force

SUBPAC - Pacific Submarine Force

SUBROC - Submarine Launched Rocket

SUBSAFE - Submarine Safety

SUBSCOL - U.S. Naval Submarine School, New London, Connecticut

TACNOTE - Tactical Note

TAD - Temporary Additional Duty

TAV - Technical Availability

TECHEVAL - Technical Evaluation

TECH/OPEVAL - Technical/Operational Evaluation

TWS - Torpedo Weapons System

VITRO - VITRO Laboratories

WECO - Westinghouse Electric Corp.

WSAT - Weapons System Accuracy Trials

WSR - Weapons System Review

WWII - World War Two

APPENDIX II

THE ORDALT PROGRAM

The Ordnance Alteration (ORDALT) Program is sponsored by the Naval Ordnance Systems Command (NAVORDSYSCOM), for the purpose of maintaining physical, as well as, configuration control of installed ordnance equipments. Before an existing ordnance system that is installed in a Naval vessel or shore station can be altered, that alteration must be approved and proofed; it must also be implemented as an ORDALT kit within the ORDALT system.

To become an ORDALT kit, an alteration must be accompanied by concurrent changes to all related technical publications, all engineering drawings and ship's plans, all preventative maintenance system documents [e.g. Maintenance Data Cards (MDC's) used to maintain the equipment], and all supply documentation [Consolidated Shipboard Allowance Lists (COSAL) and Allowance Parts Lists (APL's)]. In addition, the spare parts must be in the supply system and the kit must include initial spare parts, if required, for the parent ship or station supply inventories. And, last but not least, an ORDALT kit must include all of the necessary step-by-step instructions for accomplishment of the alteration.

An ORDALT can be proposed by any competent vendor, command, or individual. However, to gain approval, it must represent a significant and beneficial improvement to an existing ordnance system or be necessary for safety to equipment or personnel.

The physical hardware proofing and full kit proofing for submarine weapons system ORDALT's has been the responsibility of NUSC, Newport. Normal procedure calls for NUSC, Newport to proof the alteration in their laboratory and the full kit onboard a submarine assigned by the Type Commander (e.g. COMSUBLANT). Final approval for the plans and kit must also have received prior approval by the appropriate functional codes within NAVORDSYSCOM.

Once the kit has been fully proofed, it is made available for installation in existing equipments. The kit has, of course, already been assigned a number and is made ready for distribution upon final approval and the fabrication of a sufficient initial quantity. ORDALT kits and the attendant preparation costs are funded by NAVORDSYSCOM.

When made available for general installation, an ORDALT kit is normally grouped with other technically compatible kits into a multiple ORDALT package called a "Baseline". Normally, installations are scheduled to achieve a defined baseline configuration. This procedure greatly reduces the difficulty of trying to effect support changes in multiple small increments for each ORDALT kit. The idea is to bring a ship's hardware and software configuration together in a better controlled, more economically suitable, and more manageable steps. Baseline changes usually require several hundred manhours to accomplish. ORDALT installations are scheduled for accomplishment either in a shipyard or in the field, dependent primarily upon the complexity and time

available. Shipyard ORDALT's are scheduled by NAVORDSYSCOM and are automatically integrated into the Type Commander's shipyard overhaul work lists, following a review by the Type Commander's staff for correctness, applicability, and possible conflicts with other scheduled work. Field installations are scheduled by NOSSOLANT/NOSSOPAC, who orders the kits after coordinating material, ship, and technician availability through NUSC, Newport and the Type Commander. NUSC, Newport normally provides contractor or in-house technicians to install ORDALT's. However, NOSSOLANT/NOSSOPAC and/or Fleet personnel are able to, and often do, perform minor or less complicated ORDALT's.

After an ORDALT is installed, the installing activity assists the parent command in making the necessary changes to the supporting systems (e.g. software and the supply system). NOSSOLANT/NOSSOPAC provides a final post ORDALT review to ensure total compatability. At the time the ORDALT is installed, a major requirement exists to change the Ship's Armament Inventory List (SAIL) to reflect the new configuration. The SAIL change is forwarded to several activities within the ordnance support community, but the essential purpose of the change is to effect the necessary change in the NAVORDSYSCOM configuration data bank. If that change is properly made, all supporting systems will respond to the new configuration requirement. However, if that change is not made, monumental administrative problems can be precipitated. Cumulative failures to make changes result in loss

of configuration control and related support. Each command possessing ordnance equipment bears the ultimate responsibility for maintaining an accurate SAIL.

APPENDIX III

THE SHIPALT PROGRAM

The Ship Alteration (SHIPALT) Program is sponsored by the Naval Ships System Command (NAVSHIPSYSCOM), for the purpose of maintaining physical as well as configuration control of ship design. SHIPALT's (as opposed to ORDALT's for example) apply to those items specifically under the design control of NAVSHIPSYSCOM. Such items could normally include all hull and integrally installed ship's supporting systems (i.e. winches, piping systems, switchboards, wiring, fuel systems, auxiliary equipment installation configurations, etc.).

Before en existing item or system under NAVSHIPSYSCOM cognizance can be altered, the basic SHIPALT plan must be approved by NAVSHIPSYSCOM.

A SHIPALT can be proposed by any competent vendor, command or individual. However, to gain approval it must represent a significant and beneficial improvement to the existing design, or be necessary for the safety of the equipment, system, ship, or personnel.

While it is ideally intended that SHIPALT's accomplish the same degree of control as ORDALT's, in practice, administration of the SHIPALT program has been less rigorous.

Approved SHIPALT's are, in many cases, issued with more generalized instructions for accomplishment than are ORDALT's. Hence, the installing activity (i.e. shipyard, tender, or

ship's force) is often permitted some degree of flexibility in the physical implementation. While the end purpose is the same, in effect, the same SHIPALT, installed by different activities, has not, in most instances, reflected the same physical detail. This has caused criticism by those in favor of more detailed control. It has, paradoxically, also led to dissimilarity in configuration of systems between ships of the same class. However, in all fairness to the system, the generalized instructions are brought about by the fact that, for all practical purposes, no two ships of the same class are built identically. This is not to say that there are gross differences, but construction practices do, in fact, vary between shipyards. It's an unfortunate fact of life that has to be lived with. As a result, if a SHIPALT were designed to accommodate a specific ship down to the most minute of details (e.g. calling out terminal numbers or radius of turn for a new piping installation so that it will exactly fit), there is a very high probability that the SHIPALT will accommodate that ship but no others. Hence, the need exists to issue a little "artist's license" with each SHIPALT.

All approved SHIPALT's are identified by an assigned SHIPALT number. SHIPALT's are additionally categorized in accordance with who is authorized to install them and who will fund them. SHIPALT's scheduled by NAVSHIPSYSCOM for shipyard accomplishment are normally funded by NAVSHIPSYSCOM. SHIPALT's falling into this category are, like ORDALT's included in the ship's overhaul work package and are reviewed

by the Type Commander (e.g. COMSUBLANT) for compatibility with other shipyard work. Other SHIPALT's funded by NAVSHIP-SYSCOM are authorized for accomplishment by forces afloat. In addition, still others are approved by NAVSHIPSYSCOM for accomplishment, but are funded by the Type Commander.

As in the case of ORDALT's, it is critical that completed SHIPALT's be properly reflected in the ship's master plans and that all supporting documentation (software) be changed to reflect the alteration. It is incumbent upon each command receiving SHIPALT's to ensure that total compatibility is accomplished persuant to installation. Failure to change supporting documentation results, as is the case with ORDALT's which are improperly recorded, in the loss of configuration control and will contribute to inaccurate ship's master plans. The latter deficiency is, in part, the reason why all planning for shipboard alterations or the installation of new equipment should be preceded by a thorough onboard "ship check." Master plans are notoriously inaccurate, regarding the specific detail required for planning and accomplishing such shipboard changes.

APPENDIX IV

Charters/Responsibilities of COMSUBLANT Staff Functional Codes[1]

00 COMSUBLANT (THE COMMANDER)

Functional Statement

NATIONAL Command, operational and administrative control of ships, units and shore (field) activities assigned to SUBLANT; operational control over other units assigned by higher authority. Submarine Operational Advisor to CINCLANT for Polaris/Poseidon Operations, serving as code J006, CINCLANT Staff. Assists BUPERS and Naval District Commandants in support of Naval Research Program.

COMSUBACLANT Additional duty to SACLANT as Operational Advisor for Polaris/Poseidon Operations, and a NATO Major Subordinate Commander as COMSUBACLANT. Advises SACLANT on submarine matters and coordinates submarine planning within the Atlantic Command.

COMSUBWESTLANT Subordinate command of CINCWESTLANT. Serves as NATO Commander as COMSUBWESTLANT. Principal responsibility is Operational Commander NATO Submarines, Western Atlantic Area.

SPECIAL COMMAND ASSISTANTS TO THE COMMANDER

001 FLAG LIEUTENANT & AIDE

Functional Statement - Personal aide to Commander. Direct representative of Commander relating to uniforms, honors, ceremonies, official visits, salutes, presentation of awards, and transportation. Division Officer for Flag mess stewards and Commanders and Chief of Staff writers. Flag Mess Caterer. Additional duty as Flag Lieutenant & Aide for COMSUBACLANT and COMSUBWESTLANT.

01 CHIEF OF STAFF

Functional Statement - Direct representative of the Commander; effectuates the policies and orders of the Commander and advises the Commander of all significant matters pertaining to command. Directs and Coordinates work of the Staff. Coordinates activities of the command. Supervisory authority over Summary and Special Courts-martial. Senior Aide to Force Commander. Additional duty as Chief of Staff, COMSUBACLANT and CONSUBWESTLANT.

---

[1] See page IV-19 for COMSUBLANT Staff organization chart.

011 MCPOC

Functional Statement - Advises the Force Commander and provides assistance to SUBLANT subordinate commands in all matters pertaining to enlisted personnel. Represents Force Commander at various ceremonies. Serves as member of Awards Board for enlisted personnel of SUBLANT.

002 FLAG SECRETARY AND AIDE

Functional Statement - Assistant for coordination of staff work, and administrative activities of the staff. Assists staff officers in preparations of plans and directives. Secretary of Awards Board and Beneficial Suggestion Board. Commanding Officer, Flag Allowance. Personal aide to the Commander. Additional duty as Flag Secretary, COMSUBACLANT and COMSUBWESTLANT.

0021 ASSISTANT FLAG SECRETARY

Functional Statement - Executive Officer of Flag Allowance. Classified Material, Top Secret and COSMIC Control, Staff Personnel, Education, and Postal Officer. Coordinates the administrative activities of the Flag Office. Additional duty as Assistant Flag Secretary, COMSUBACLANT and COMSUBWESTLANT.

003 PUBLIC AFFAIRS OFFICER

Functional Statement - Directs PAO program and advises Commander on PAO matters. Arranges interviews and press conferences. Provides news coverage of Force activities and events. Acts on requests from press and public. Obtains cruises for selected civilians. Obtains security clearances for material released. Maintains Command History. Administrator of overseas community relations fund. Responsible for Quarterly Information Bulletin. Coordinates graphic aids section.

004 FORCE MEDICAL OFFICER

Functional Statement - Assists Chief of Staff and advises Commander on medical policy and procedures. Makes recommendations concerning health problems. Advises Personnel Officer on Hospital Corps allocation. Coordinates Medical Office activities of the Force. Advises Commander on medical aspects of ABC warfare; coordinates and disseminates medical information within the Force.

005 FORCE DENTAL OFFICER

Functional Statement - Advises Commander on dental problems and services. Coordinates Force dental services. Monitors dental reports to assure best utilization of facilities and personnel. Inspects and advises dental facilities. Coordinates and disseminates dental information within the Force. Coordinates and makes recommendations for dental training. Coordinates preventative dentistry to include stannous fluoride treatments.. Establishes uniformity in dental treatment and programs.

006 FORCE LEGAL OFFICER

Functional Statement - Advises Commander and staff officers on legal matters. Supervises military justice in the Force. Reviews courts-martial convened by subordinate commands. Prepares actions and recommendations for Force Commander in military justice matters. Reviews and prepares endorsements for investigations. Serves as staff Legal Assistance Officer. Coordinates Legal Assistance Program for Force. Administers Force Safe Driving Program. Coordinates legal services for subordinate units with Navy Law Center.

007 PROGRAM MANAGER, FBM PERSONNEL INFORMATION PROGRAM (PIP)

Functional Statement - Implements PIP, designed to foster personal growth and maturity, through distribution of materials, evaluation of new material, supervision of budget allocation, and attending appropriate conferences and seminars dealing with PIP matters.

N-1 SHOP (ADMINISTRATION/PERSONNEL)

N1 ASSISTANT CHIEF OF STAFF FOR ADMIN/PERSONNEL & NAVAL RESERVE

Functional Statement (not available)

N10 FORCE PERSONNEL OFFICER

Functional Statement (not available)

N11 CAREER COUNSELOR

Functional Statement (not available)

N12 FORCE CHAPLAIN

Functional Statement (not available)

N-2 SHOP (READINESS AND TRAINING)

N2 ASSISTANT CHIEF OF STAFF FOR READINESS AND TRAINING

Functional Statement - Coordinate tactical and ASW development programs. Administer TACNOTE system and tactical digest. Review exercise OPORDS and reports. Responsible for the Force battle efficiency competition and awards. Senior member, Board of Administrators, Command Recreation Fund. Member of Joint SUBLANT/SUBPAC ASW Steering Committee.

N21 FORCE TRAINING OFFICER

Functional Statement - Coordination, planning and supervision of shore based instructions, sonar information centers and submarine based training programs including qualification in submarines, qualification for command and advancement in rate. Precommissioning and overhaul training. Control of TAD funds.

N211 ASSISTANT FORCE TRAINING OFFICER

Functional Statement - School quota control. Polaris/Poseidon training control for off crew and SSBN crews in overhaul, shipyard, factory, and special training control; pre-comm/reftra/shkon training. Submarine officer/enlisted qualification and command qualifications.

N22 TACTICAL READINESS OFFICER

Functional Statement - Coordinate tactical and ASW development programs. Administer TACNOTE system and tactical digest. Review exercise OPORDS and reports. Responsible for the Force battle efficiency competition and awards. Senior member, Board of Administrators, Command Recreation Fund. Member of Joint COMSUBLANT/COMSUBPAC ASW steering committee.

N23 PROSPECTIVE COMMANDING OFFICER INSTRUCTOR

Functional Statement - Plan and conduct courses of instruction for submarine Prospective Commanding Officers. Refresher Training for SUBRON/DIVCOMS and coordinate training of Prospective Commanding Officers/Executive Officers assigned surface ships of the Force.

N231 ASSISTANT PROSPECTIVE COMMANDING OFFICER INSTRUCTOR

Functional Statement - Develop curriculum for instruction of Prospective Commanding Officers. Monitor courses of instruction for submarine Prospective Commanding Officers.

N-3 SHOP (PLANS AND OPERATIONS)

N3 DEPUTY CHIEF OF STAFF FOR PLANS AND OPERATIONS (C-3 NATO)

Functional Statement - Coordinate and supervise Force Plans, exercises, operations, intelligence, communication tactics, and training functions. Prepares all wartime and mobilization plans. Acts as Chief of Staff in the absence of the Chief of Staff. Additional duty as Deputy Chief of Staff for Plans and Operations on the staff of COMSUBACLANT/COMSUBWESTLANT.

N03 OPERATIONS ANALYST (OEG REPRESENTATIVE)

Functional Statement - Scientific and analytical advisor to N3. Examines and evaluates plans, concepts, and tactics concerning submarine warfare and makes recommendations for improvement of submarine systems.

N-3 SHOP (NORTHWOOD, ENGLAND)

N3N COMSUBLANT REPRESENTATIVE NORTHWOOD (C-3N NATO)

Functional Statement - Operates CINCESTLANT NATO submarine plot. Directs message center. Maintains liaison with various national and NATO authorities. Coordinates efforts to minimize submerged interference.

N3N1 ASSISTANT COMSUBLANT REPRESENTATIVE NORTH (C-3N1 NATO)

Functional Statement - Communications officer and RPS custodian. Classified material control, TOP SECRET control, and crypto security officer for Northwood.

N-31 SHOP (OPERATIONS)

N31 ASSISTANT CHIEF OF STAFF FOR OPERATIONS (C-31 NATO)

Functional Statement - Coordinate and supervise the operation and movement of ships. Promulgate employment and exercise schedules and operation orders. Assign notional numbers. Evaluate unidentified submarine contacts, collisions, and groundings. Force navigator, oceanographer and readiness officer. Supervises Command Watch Officers. Maintain the emergency action file, search and rescue plans and weather information. Arrange port visits and clearances. Monitor SOPA functions. Additional duty as Operations Officer on staff of COMSUBACLANT/COMSUBWESTLANT.

N-31 SHOP (cont.)

N311 ASSISTANT OPERATIONS OFFICER (C-311 NATO)

Functional Statement - Supervises Command Watch Officers. Review and route mail and message traffic. Acts as Operations Officer in absence of N31.

COMMAND WATCH OFFICER (N311A/B/C/D/E)

Functional Statement - Complete coverage of all phases of submarine operations. Thorough familiarization with submarine deployment, movements, operational status, plotting instructions and intelligence matters. Represents the Commander and is empowered to take action in his name.

N312 ASSISTANT OPERATIONS OFFICER FOR SCHEDULING

Functional Statement - Assists in the functions and planning for the preparation and execution of Force employment schedules.

N-32 SHOP (PLANS)

N32 PLANS OFFICER (C-32 NATO)

Functional Statement - Development and preparation of basic national war plans, long-range Force requirements, special plans and contingency plans. Additional duty as Planning Officer for COMSUBACLANT/COMSUBWESTLANT.

C-32N ASSISTANT NATO PLANS OFFICER (ADDU FROM SACLANT)

Functional Statement - Provides assistance in the coordination and review of NATO, Allied Command Atlantic, War Plans and NATO planning conferences.

N321 WAR PLANS OFFICER (C-321 NATO)

Functional Statement - Preparation and review of national and NATO general war plans. Security and TOP SECRET control officer for plans section. Administration supervisor of plans section and assigned personnel.

N-32 SHOP (cont.)

N322 CONTINGENCY PLANS OFFICER (C-322 NATO)

Functional Statement - Responsible for preparation of contingency and unconventional warfare plans, facilities project planning, construction planning for force activities ashore, and Force structure and administrative assignment plan. Additional duty as contingency plans officer on the staff of COMSUBACLANT/COMSUBWESTLANT.

N-33 SHOP (COMMUNICATIONS)

N33 COMMUNICATIONS OFFICER (C-33 NATO)

Functional Statement - Force and staff communications. Regulation and review of submarine broadcast, communication reports and projects, and communication OPLANS & OPORDS. Custody of communications equipment, RPS & COMTAC publications. NATO codeword action officer. Additional duty as Communications Officer of the staff of COMSUBACLANT/COMSUBWESTLANT.

N331 ASSISTANT COMMUNICATIONS/MESSAGE CENTER OFFICER (N331 NATO)

Functional Statement - Force Communication Officer in absence of N33. COMTAC publication control officer. Supervise Communication Watch Officers. Enlisted Division Officer for the Message Center. Review incoming/outgoing messages. Supervise communications projects and submarine broadcasts. Courier officer.

N332 RPS CUSTODIAN

Functional Statement - Act as Registered Publications System custodian, officer courier, force crypto-security officer, and Communications Watch Officer, when necessary.

COMMUNICATION WATCH OFFICER (N332A/B/C/D)

Functional Statement - Insure efficient operation, administration and security of message center. Insure proper operation of outgoing message traffic and incoming message routing. Assistant Division Officer. Member CINCLANT/CINCLANTFLT emergency action team.

N-34 SHOP (INTELLIGENCE)

N34 INTELLIGENCE OFFICER

Functional Statement - Special Security Officer. Screen and disseminate intelligence information. Coordinate special submarine matters. Force censorship officer. Advise on photographic matters. Initiate action on intelligence security violations. Responsible for security annex of basic OPLAN & OPORD.

N341 ASSISTANT INTELLIGENCE OFFICER

Functional Statement - Assistant Special Security Officer. Maintain intelligence publications. Act as Force Intelligence Officer in the absence of N34.

N-4 SHOP (LOGISTICS & MANAGEMENT)

N4 DEPUTY CHIEF OF STAFF FOR LOGISTICS AND MANAGEMENT

Functional Statement - Coordination and evaluation of Force meterial and logistics conditions. Supervision of matters concerning Force material, supply, and fiscal ordnance maintenance and new developments pertaining thereto.

N-40 SHOP (MATERIAL)

N40 ASSISTANT CHIEF OF STAFF FOR MATERIAL

Functional Statement - Responsible for matters relating to ship maintenance and material readiness of all units of the Submarine Force. Coordination and review of the maintenance section. Formulation of maintenance and material policies for ships. Scheduling assignments of restricted availabilities and overhauls. Participation in ship alteration/modernization/improvement programs. Provide engineering and technical advice regarding ship design and maintenance, including new construction, conceptual proposals, Force levels, and ship activation/inactivation. Represent the Commander at designated tests and trials.

N-40 SHOP (cont.)

N40A ASSISTANT MAINTENANCE OFFICER FOR BUDGETING AND SCHEDULING

Functional Statement - Assist N40 in overhaul funds administration, budget preparation and justification, and overhaul scheduling. Prepare battery renewal and interim docking schedules. Utilize ADP methods and analyze trends in ship maintenance costs.

N401 FORCE MAINTENANCE OFFICER

Functional Statement - Principal technical assistant to N40. Administers Force modernization program. Coordination with industrial and governmental activities on matters concerning the design, construction, modernization, and repair of ships. Monitor quality assurance/control and SUBSAFE certification programs. Responsible for hull surveys and inspections. Administers overhaul funds and budget preparation. Maintains overhaul schedules.

N4012 ASSISTANT MAINTENANCE OFFICER FOR QUALITY ASSURANCE/ SUBSAFE

Functional Statement - Monitor SUBSAFE certification. Prepare quality assurance/control directives.

N4013 ASSISTANT MAINTENANCE OFFICER FOR MAINTENANCE AND MATERIAL MANAGEMENT PROGRAMS

Functional Statement - Develops and implements programs for improved maintenance management and logistic support. Establishes criteria and develops techniques for evaluating performance of intermediate level maintenance activities. Makes recommendations concerning development and improvement of preventative maintenance policies and practices. Develops and implements techniques for utilization of 3M data.

N402 MATERIAL OFFICER FOR NUCLEAR ATTACK SUBMARINES

Functional Statement - Responsible for material upkeep, repair, and alteration programs of SSN's. Advises on material aspects of SSN modernization, conversion, and overhaul. Takes action on shipyard work list. Maintains cost data on SSN overhaul and RAV/TAV funding. Nuclear recording EFPH.

N-40 SHOP (cont.)

N402A ASSISTANT SSN MATERIAL OFFICER FOR SSN-637 CLASS

Functional Statement - Assists N402 with primary cognizance of commissioned SSN-637 class submarines. Develops and implements programs for improved maintenance management and logistic support for 637 class. Coordinates development and implementation of improved production management system for Force intermediate level maintenance activities for 637 class.

N402B ASSISTANT SSN MATERIAL OFFICER FOR PRE-594 AND ONE-OF-A-KIND SSN's

Functional Statement - Assists N402 with primary cognizance of pre-594 class SSN's, NR-1, and SSN 671. Develops and implements programs for improved maintenance management and logistic support for pre-594 class. Coordinates development and implementation of improved production management systems for Force intermediate level maintenance activities for pre-594 class.

N402C ASSISTANT SSN MATERIAL OFFICER FOR SSN 594 CLASS AND NEW CONSTRUCTION

Functional Statement - Assists N402 with primary cognizance of SSN-594 and new construction SSN's (through end of shipbuilder's guarantee period). Develops and implements for improved maintenance management and logistic support for SSN-594 class. Coordinates development and implementation of improved production management systems for Force intermediate level maintenance activities for SSN-594 class. Maintains liaison with NAVSHIPS ship Acquisition Project Manager. Implements a diesel engine inspection program for all submarines.

N403 MATERIAL OFFICER FOR NON-NUCLEAR SUBMARINES

Functional Statement - Responsible for material, upkeep, repair alteration, and allowance for SS's. Maintains records and status information on diesel material and maintenance matters. Prepares action on shipyard work lists. Maintains cost data and makes budget recommendations. Supervises enlisted personnel of the maintenance section.

N-40 SHOP (cont.)

N404 MATERIAL OFFICER FOR ELECTRONICS, ACOUSTICS, OPTICS, AND NAVIGATION

Functional Statement - Responsible for electronics, acoustics, optics, navigation, noise measurement and reduction matters. Preparation of action on shipyard work lists in above areas.

N404A ASSISTANT MATERIAL OFFICER FOR ELECTRONICS (NAV)

Functional Statement - Responsible for Electronic matters, specifically radar and RDF equipments, navigation systems, and sonar and noise measurement matters. Maintain electronics/navigation systems installation records. Monitors new developments in Submarine Force electronics/navigation systems.

N404B ASSISTANT MATERIAL OFFICER FOR ELECTRONICS

Functional Statement - Responsible for electronics matters; specifically communications, ECM, associated antennas, metrology; and optics matters including allowed photographic equipment and periscopes. Maintain installation records. Monitor new developments in Submarine Force electronics/optics systems.

N405 MATERIAL OFFICER FOR FLEET BALLISTIC MISSILE SUBMARINES

Functional Statement - Responsible for the material, upkeep, repair, and alteration program for SSBN's. Liaison with NAVMATCOM and shipyards concerning SSBN material, maintenance, construction, and overhaul program. Developments in FBM special systems, nuclear propulsion, and auxiliary machinery. Maintains cost and budgeting data in above areas.

N405A ASSISTANT MATERIAL OFFICER FOR SSBN's (OVERHAULS)

Functional Statement - Assist N405 in matters of SSBN overhaul, material upkeep, repair, and alterations program. Liaison with NAVMATCOM and shipyards in above areas.

N405B ASSISTANT MATERIAL OFFICER FOR SSBN's (MAINTENANCE)

Functional Statement - Assist N405 in matters of SSBN maintenance, material upkeep, repair, and alterations program. Liaison with NAVMATCOM and shipyards in above areas.

N-40 SHOP (cont.)

N406 MATERIAL OFFICER FOR SUBMARINE TENDERS, RESCUE VESSELS, AND SERVICE CRAFT

Functional Statement - Responsible for material upkeep, repair, and alteration programs for tenders, rescue vessels, and service craft. Action on shipyard work lists and liaison with NAVMATCOM and shipyards in above areas. Maintain cost data and make budget recommendations. Maintain section responsibility for rescue, salvage and UDT/SEAL.

N407 THE NAVY MAINTENANCE AND MATERIAL MANAGEMENT (3M) OFFICER

Functional Statement - Responsible for all aspects of the 3M system, including implementation, review, analysis, and training.

N407A ASSISTANT TO THE 3M OFFICER

Functional Statement - Coordination with N7 to ensure proper collection and submission of data by ships. Analyze processed data and arrange in useable form. Adapt 3M procedure to ADP.

N408 MATERIAL OFFICER FOR NUCLEAR PROPULSION

Functional Statement - Coordinate, recommend, and advise on the technical aspects of primary nuclear propulsion systems. Radiological controls/safety. Liaison on nuclear matters with NAVSHIPS, NAVMAT, and shipyards. Maintain records of nuclear core useage. Advises action on shipyard work list pertaining to nuclear matters.

N-41 SHOP (SUPPLY)

N41 ASSISTANT CHIEF OF STAFF FOR SUPPLY

Functional Statement - Responsible for the administration of the plans and policies of the Commander in the area of supply, transportation, and financial management. Additional assigned functions include supply inspections, and audits of Force units. Scheduling of SOAP program. Responsible for material procurement, expenditure, and shipment, receipt, custody, and stowage, stock records, inventory control, subsistence, operation of general messes, transportation, resale, and air and surface cargo support to deployed FBM forces.

N-41 SHOP (cont.)

N411 SUPPLY AND TRANSPORTATION OFFICER

Functional Statement - Acts in areas of supply and transportation in the absence of N41. Administration of N41 division correspondence. Administration of officer and enlisted personnel in the Supply Division. Preparation and review of logistic plans and annexes. Review of all matters pertaining to policy or procedure in supply and transportation.

N411A MOB SUB SUPPLY SUPPORT

Functional Statement - Assists N411 in all matters pertaining to tenders, including management, inventories, load lists, and supply overhauls. Prepare briefings and presentations. Responsible for FBM site support, including air and surface resupply and allowance. Monitor supply overhauls of AS, AG, AK, and service craft.

N411A1 POLARIS/POSEIDON TRANSPORTATION OFFICER

Functional Statement - Responsible for all matters pertaining to FBM site support and FBM crew lifts. Assume the duties of N411A in his absence. Responsible for all matters pertaining to subsistence of shipyard messes.

N411B SUBMARINE PROGRAMS

Functional Statement - Development of supply management and control procedures. Responsible for Force supply readiness. Review of annual supply inspection reports. Preparation of briefings and presentations. Monitor and review supply training programs, curricula, and schedules.

N411B1 SSN SUPPLY AND PMO LIAISON OFFICER

Functional Statement - Responsible for all supply matters pertaining to SSBN's. Participation in inspections. Monitoring the supply overhauls and allowance lists of SSBN's.

N411B2 SS/SSN/ASR SUPPLY OFFICER

Functional Statement - Responsible for all supply matters pertaining to SS/SSN/ASR. Participate in inspections. Monitor the supply overhauls and allowance list of SS/SSN/ASR.

N-41 SHOP (cont.)

N412 FORCE COMPTROLLER

Functional Statement - Takes action in financial matters in the absence of N41. Prepares and reviews Force operating budgets of logistic plans and annexes for financial matters. Responsible for internal audits, financial policies, assembling management statistics, accounting functions, analyzing trends, and monitoring disbursing functions.

N412B ASSISTANT COMPTROLLER FOR FISCAL OPERATIONS (ASHORE)

Functional Statement - Provide guidance in the development of ashore operating budgets. Analyze fiscal reports and statistics. Staff Supply Officer. Develops, reviews, and administers land/space leasing arrangements and commercial industrial reviews.

N412B1 HEAD-BUDGET/ACCOUNTING (ASHORE)

Functional Statement - Assists in development of ashore segment of operating budget. Maintains records of current status and reviews execution of ashore segments of operating budget. Develops and recommends standard cost parameters for execution of ashore operating budget. Develops, administers, and reviews Headquarters Operations Budget. Coordinates, develops, and reviews TAD/TRAINING funds budget.

N412C ASSISTANT COMPTROLLER FOR FINANCIAL MANAGEMENT

Functional Statement - Reviews, compiles, and analyzes financial statistics and fiscal procedures. Compiling and reporting fuel inventories and expenditures. Responsible for audit/inspections reports and analytical review of access program. Coordinator of thrift program.

N412C1 HEAD-SPECIAL PROGRAM SELECTION

Functional Statement - Assist N412C in the execution and monitoring of assigned special projects. Coordination of tender computor programs and supply-financial problems which relate to ADP procedures.

N-6 SHOP (POLARIS/POSEIDON WEAPONS SYSTEM)

N6 DEPUTY CHIEF OF STAFF FOR POLARIS/POSEIDON WEAPONS SYSTEM

Functional Statement - Determines, improves, and reports combat readiness, operational reliability, safety, security, and system accuracy of the FBM weapons system and tactical weapons system. Assesses SSBN performance by analysis of operational information to determine capability to perform assigned missions and tasks. Assists Commander as Polaris advisor to Unified Commander.

N06 TECHNICAL ASSISTANCE (APL)

Functional Statement - Utilizes analytical methods in assessment of the effectiveness of SSBN's on patrol and in pre-deployment phases. Maintains and reviews current information concerning the readiness and accuracy standards of SSBN's.

N-61 SHOP (STRATEGIC WEAPONS SYSTEMS)

N61 FORCE STRATEGIC WEAPONS SYSTEMS OFFICER

Functional Statement - Directs N61 division in support of N6. Advises N6 on readiness, operational reliability, safety, security, and system accuracy of the FBM weapons system. Maintains development and employment plans for FBM weapons system. Reviews procedural documentation affecting tactical employment of the FBM weapons system.

N611 ASSISTANT FOR FBM NAVIGATION SUB-SYSTEM READINESS

Functional Statement - Responsible for all technical and operational aspects of the FBM weapons system navigation sub-system. Improve navigational readiness.

N612 ASSISTANT FOR FBM MISSILE READINESS

Functional Statement - Responsible for all technical, operational, readiness, and material aspects of the FBM weapons sub-system, fire control, guidance, and launcher sub-systems. Maintains information concerning the employment of deployed SSBN's.

N-62 SHOP (TACTICAL WEAPONS SYSTEMS AND WEAPONS LOGISTICS)

N62 FORCE TACTICAL WEAPONS SYSTEMS AND WEAPONS LOGISTICS OFFICER

Functional Statement - Responsible for maintaining the highest degree of logistic and material readiness with respect to tactical weapons systems and associated ordnance. Advise on all matters concerning weapons system policies, procedures, training, and doctrine.

N621 ASSISTANT WEAPONS OFFICER FOR WEAPONS LOGISTICS

Functional Statement - Maintain accountability system and effect distribution of ASTOR, Polaris, Poseidon, and SUBROC warheads. Maintain inventory of torpedoes, missiles, pyrotechnics, and associated equipment. Advise on weapons design deficiencies.

N622 ASSISTANT WEAPONS OFFICER FOR MK-48 PROJECT AND UNDERWATER FIRE CONTROL SYSTEMS

Functional Statement - Advises in all aspects of MK-48 project with respect to its introduction into SUBLANT. Advises on and monitors WSAT, COT, and FORACS Weapons System Check. Advises on adequacy of maintenance, repair, operating procedures, and logistic support. Advises on design deficiencies and recommends improvements.

N623 ASSISTANT WEAPONS OFFICER FOR TACTICAL WEAPONS AND WEAPONS MATERIAL

Functional Statement - Assists Weapons Officer with primary cognizance of tactical weapons, preparation procedures, quality assurance, weapons loading/handling equipment and procedures, weapons system material, surface armament, pyrotechnics signals and evasion devices. Advises on adequacy of design, maintenance, repair, operating procedures, and logistic support. Supervises administration of N62 office and assigned enlisted personnel.

N-63 SHOP (NUCLEAR WEAPONS SAFETY)

N63 FORCE NUCLEAR WEAPONS SAFETY OFFICER

Functional Statement - Responsible for nuclear weapons safety, security, inspections, and procedural documentation. Implementation and maintenance of COMSUBLANTINST 58110.1, CINCLANT OPORD 2000, ANNEX "W", and SWOP libaray. Schedule and coordinate nuclear weapons inspections. Chairman of Force Nuclear Weapons Safety Council.

N631 ASSISTANT FORCE NUCLEAR WEAPONS SAFETY OFFICER

Functional Statement - Assists N63 in all duties when assigned. Advises on all matters concerning the FBM weapons system.

N-64 SHOP (SSBN SECURITY)

N64 SSBN SECURITY PROGRAM OFFICER

Functional Statement - Responsible for the direction, planning, coordination, and supervision of the program, including determining and scheduling required exercises, designing new tactics, determining those areas requiring simulation model effort, and coordinating with other commands and the New Development Officer.

N64A ASSISTANT SSBN SECURITY PROGRAM OFFICER

Functional Statement - Assists the Director in carrying out his functions and duties. Responsible for the design and implementation of at-sea exercises including participation as umpire, assisting in analysis of exercises and the preparation of summary reports.

N641 HEAD, TACTICAL TEAM

Functional Statement - Responsible for the development and exercise of analytical and simulation models including the analysis and evaluation of exercises and the supervision of the Tactical Analysis Group.

N642 HEAD, RECONSTRUCTION TEAM

Functional Statement - Responsible for the collection of at-sea data and the reconstruction of these exercises to meet the needs of the Analysis Group. Assists in the scheduling, planning for, and evaluation of new equipments pertinent to the program.

N-7 SHOP (AUTOMATIC DATA PROCESSING)

N7 ASSISTANT CHIEF OF STAFF FOR AUTOMATIC DATA PROCESSING SYSTEMS

Functional Statement - Provides ADP support to Commander and staff. Coordinator for all ADP matters. Maintains liaison with higher authority concerning ADP management. Monitors command ADP usage and development, tactical data systems and intelligence systems.

N71 ASSISTANT FOR ADP OPERATIONS

Functional Statement - Coordinates scheduling ADP production. Directs software and hardware testing; analyzes ADP products; liaison officer with systems commands and subordinate commands.

N72 ASSISTANT FOR PROGRAM DEVELOPMENT

Functional Statement - Systems analyst of integrated mechanized EAM/EDPM data systems. Programs new applications and reviews EAM/EDPM operation programs. Supervises programming sub-section. Develops flow charts. Converts machine logic charts into machine functions.

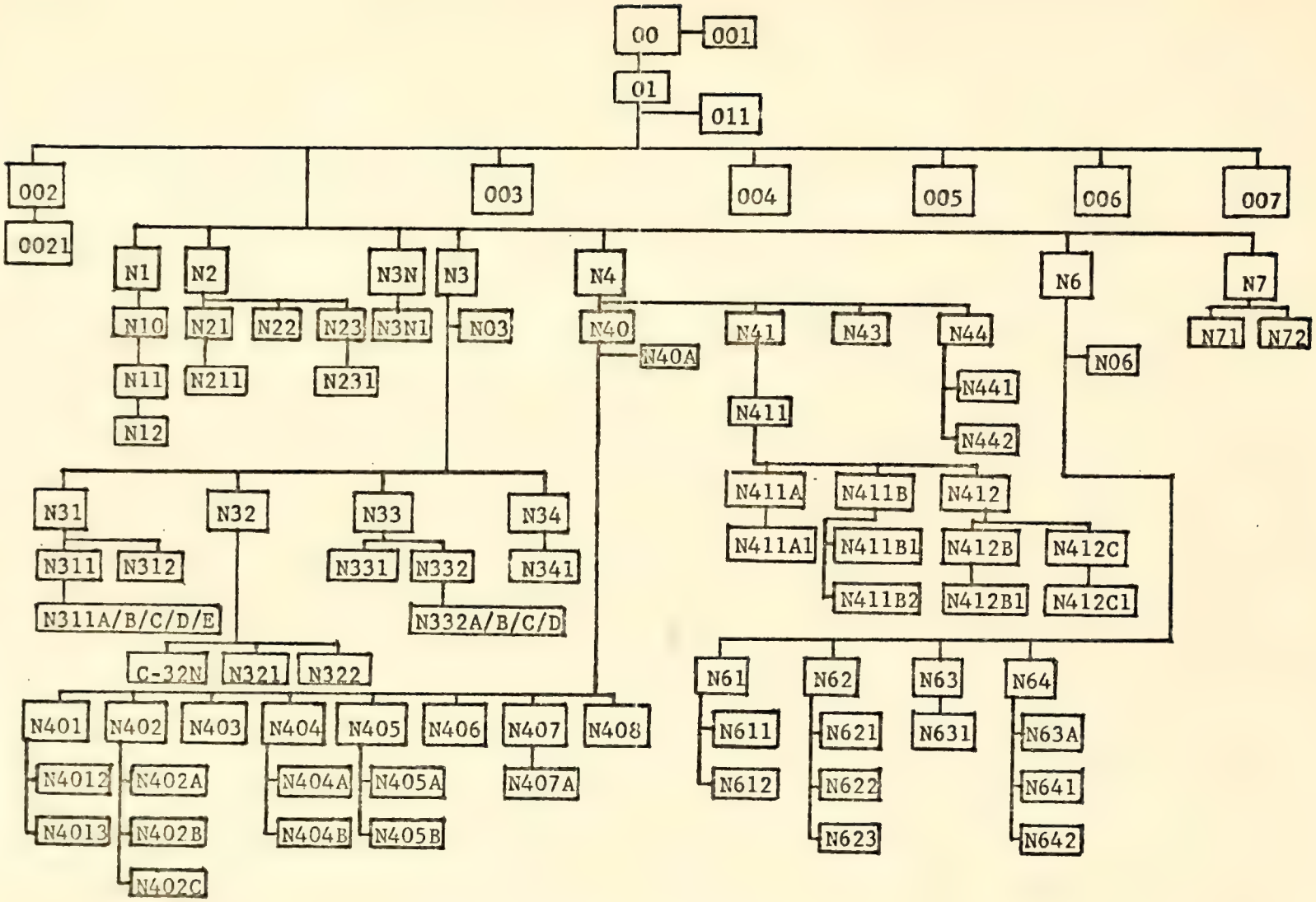

COMSUBLANT Staff Organization

APPENDIX V

TYPICAL DUTIES OF, AND RESPONSIBILITIES NORMALLY ASSIGNED TO NAVY CHIEF PETTY OFFICERS

A Chief Petty Officer (CPO) is a senior Navy enlisted man with, normally, more than ten years service. In most cases, his formal education stopped at the high school level. However, it is not too uncommon to find CPO's pursuing college degrees during their off-duty hours.

All Navy enlisted personnel are divided into ratings which are a function of some specialty ranging from cooking to maintenance of sophisticated electronic equipment. The complexity of today's Navy, particularly with regard to equipment, dictates that most Navy enlisted ratings by formed to provide specialists to operate and/or maintain a specific category of equipment. The range of equipment categories includes, but is not limited to: propulsion equipment, radar, sonar, several kinds of fire control systems, computer systems, aircraft maintenance, aircraft handling and launching systems, and a whole host of weapons systems.

Other Navy enlisted ratings are tied to the provision of a number of services such as food handling and preparation, supply functions, ship's service functions (e.g. laundry and dry cleaning, hair cutting, operation of ship's store facilities, etc.), communications (visual and electronic), ship's operation (Quartermasters and Boatswain's Mates), payroll disbursement and accounting, and a great deal more.

The CPO can be likened to a master tradesman in his area of expertise. He has essentially reached the pinnacle of his career, unless he decides to pursue one of a number of programs leading to a commission. Although there are enlisted men who do seek a commission, the majority do not. And, to make the careers of the majority more appealing by preventing stagnation,[1] a program which provided two more CPO promotion levels (Senior CPO and Master CPO) was initiated in the late 1950's.

As a result of the Navy enlisted rating structure being linked to the performance of a specialized form of work, the Navy enlisted man becomes a specialist or a technician. Some Navy enlisted men are exposed to formalized leadership training, but the majority are indoctrinated in the world of people management by the "school of hard knocks." Some fair well, and others don't. The situation is somewhat aggravated by the fact that recommendations for advancement are customarily connected to the enlisted man's ability to perform his technical specialty. In fact, in many cases, if an enlisted man has sufficient time in grade and has satisfied the administrative requirements for advancement (usually in the form of correspondence courses), the man's recommendation is too often approved in a very impersonal "rubber stamp"

---

[1] Once advanced to CPO, there was a tendancy for some enlisted men to turn off the drive they used to achieve promotion. Some simply sat back and became wards of the government until they became eligible to retire. This practice is facetiously referred to in some quarters as "being retired on active duty."

fashion, giving little or no regard to the man's ability to deal with people or his ability to handle the additional responsibilities which will come with the promotion. It should be understood that this is through no fault of the Navy enlisted man. Rather, it is a practice which has grown into use by the Navy officer corps in the face of a myriad of, seemingly, more pressing work.

Causes aside, the result is that several Navy enlisted men advance to the CPO level with little ability to manage anything, short of their technical specialty. Their exposure to personnel management is usually limited to dealing with their subordinates. On some larger ships or shore stations, there may be many CPO's in the same division, thereby exposing them to personnel management at the peer level. However, CPO's, in general, are somewhat reluctant to deal with officers outside of their immediate division or department. This is not to say that CPO's live in shells -- that simply isn't true. What is suggested is simply that a CPO rarely develops a one-on-one relationship with an officer other than his immediate superior.

This two part situation, the promotion to the CPO level based on technical competence alone and the reluctance of CPO's to comfortably deal with the officer community as a whole, was alleviated somewhat by the additional CPO promotional levels mentioned earlier. Promotion to the Senior and Master CPO levels is dealt with much like the officer selection process from within the enlisted ranks. Each applicant

for promotion is screened by an interview board that is made up of officers divorced from his command as well as his technical specialty. The intent is to examine the applicant's ability to effectively present himself to and communicate with "strange" impartial officers. Additionally, it reduces the likelihood of "rubber stamp" recommendations for promotion. Professional aspects of the promotion candidate are dealt with in the usual way: by examination. However, the applicant must have successfully completed the examination before he may face the interview board. As a result, better quality CPO's are being introduced into the Senior/Master CPO structure. In fact, in some commands, junior officer positions are being filled by Senior and Master CPO's. They are also being assigned to staffs as assistants to staff officers filling functional roles. Seldom, however, are they ever tasked to fill a functional role by themselves. This is principally due to the fact that personnel filling those roles must often speak to both officers and senior civilians outside of their command, in the voice of the staff commander. This is an awkward position, at best, for an enlisted man. However, it probably goes without saying that there are many Senior and Master CPO's that can be entrusted with such jobs. Unfortunately, the performance capabilities of these people will go unrecognized until each of them surfaces, one by one, and the Navy turns around the stereotype of the typical Navy Chief, coffee cup in hand, enjoining the details of a specific task upon his own group of subordinate specialists.

APPENDIX VI

SUBMARINE ONBOARD TORPEDO LOADING AND HANDLING EQUIPMENT

This Appendix attempts to provide insight regarding the configuration and scope of equipments involved in submarine torpedo loading and handling evolutions. The coverage is not exhaustive by any stretch of the imagination. Nevertheless, it should render an appreciation for the potential difficulties involved in designing and installing a "softening SHIPALT." Such a SHIPALT must protect the torpedo skin and assure expeditious loading while simultaneously providing for correct torpedo alignment. While reviewing this Appendix, recognize the fact that all fixtures and components coming into contact with the torpedo must be physically "softened."

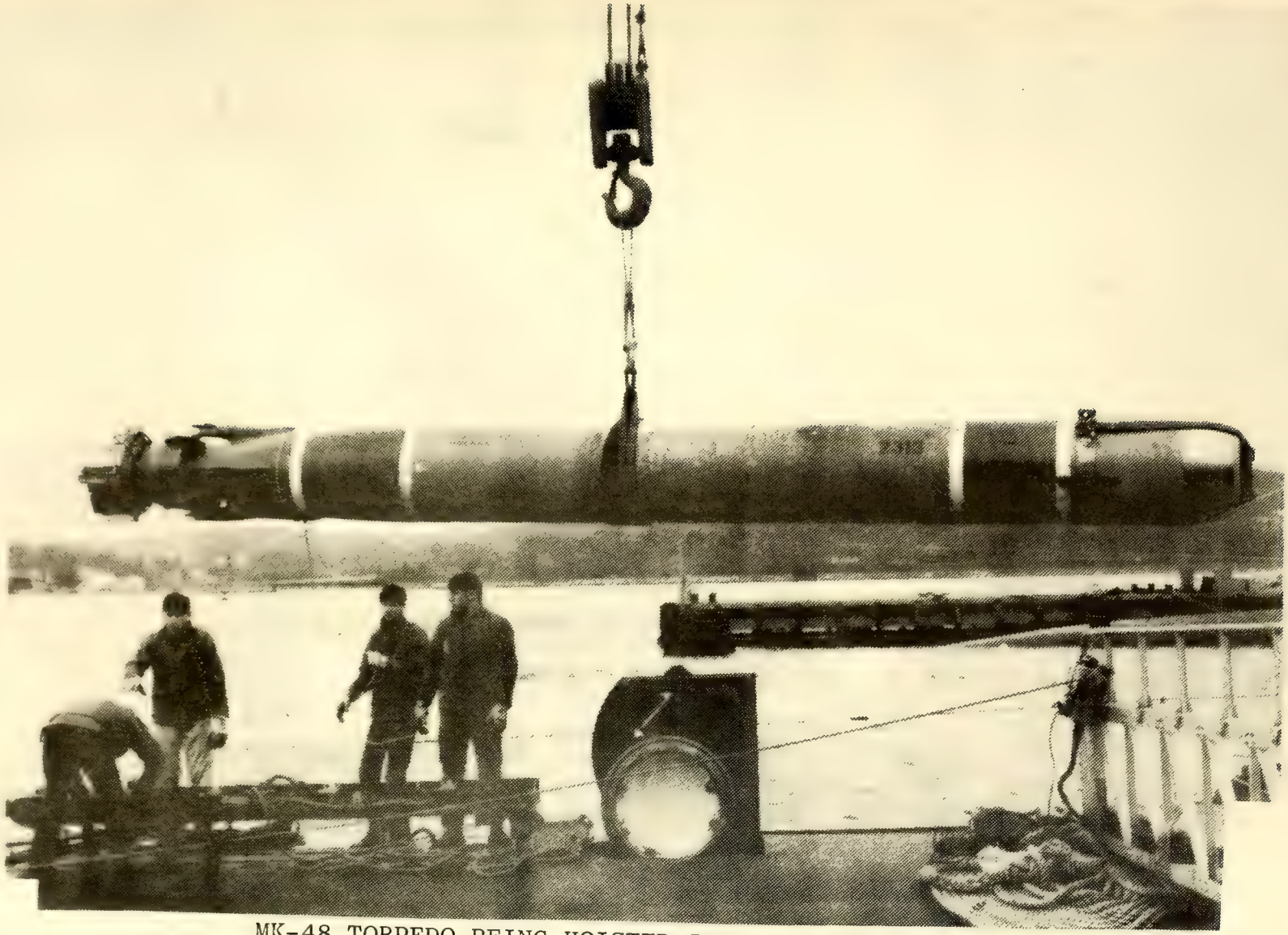

MK-48 TORPEDO BEING HOISTED INTO LOADING POSITION

MK-48 TORPEDO BEING LOADED INTO SUBMARINE

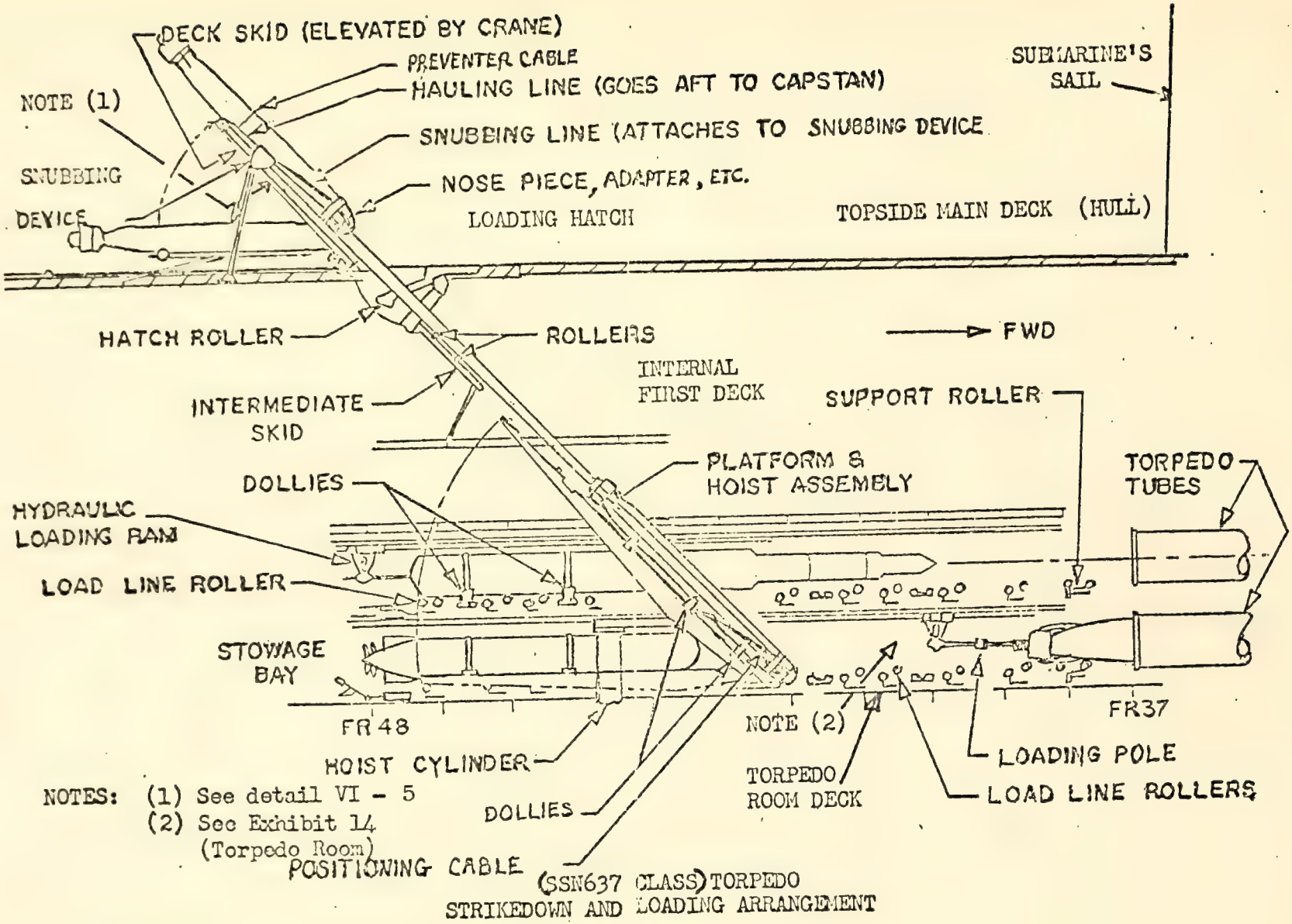

NOTES: (1) See detail VI - 5
(2) See Exhibit 14 (Torpedo Room)

(SSN637 CLASS) TORPEDO STRIKEDOWN AND LOADING ARRANGEMENT

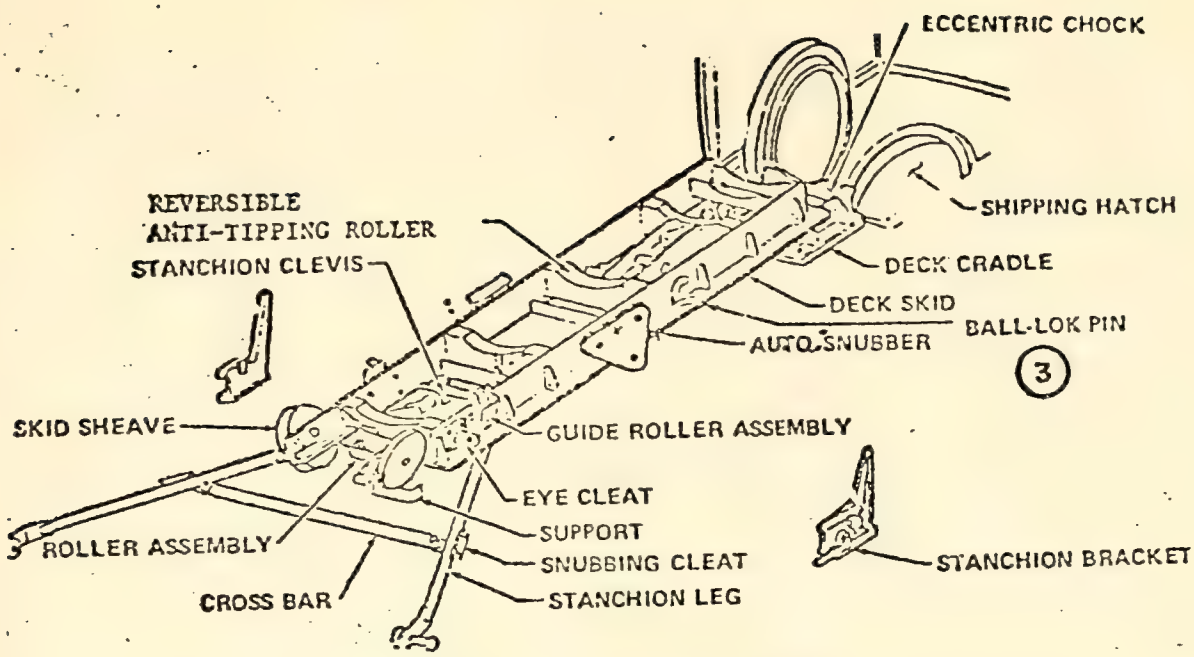

DECK- SKID TOPSIDE ON MAIN DECK

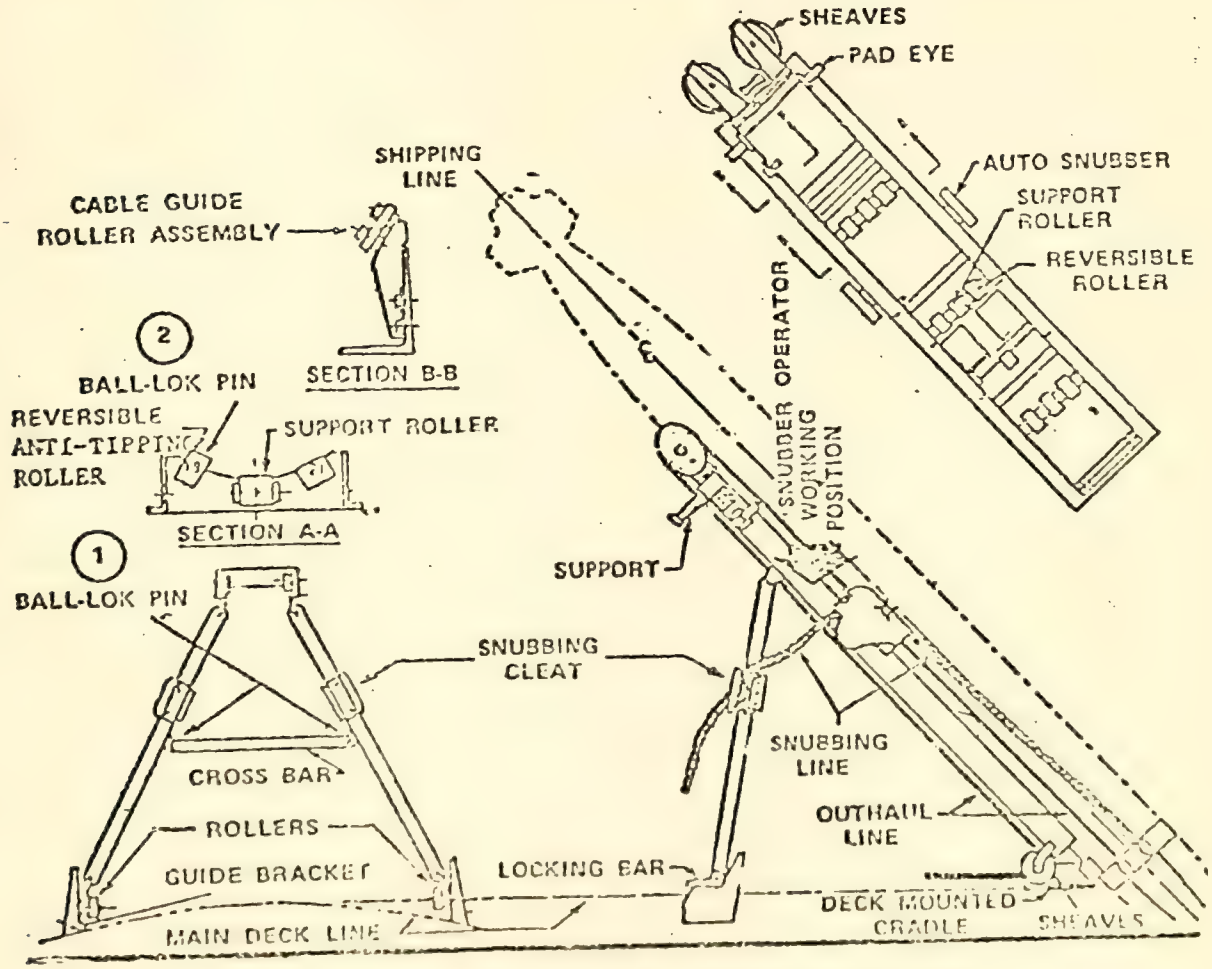

DETAIL TOPSIDE DECK SKID AND RIGGING

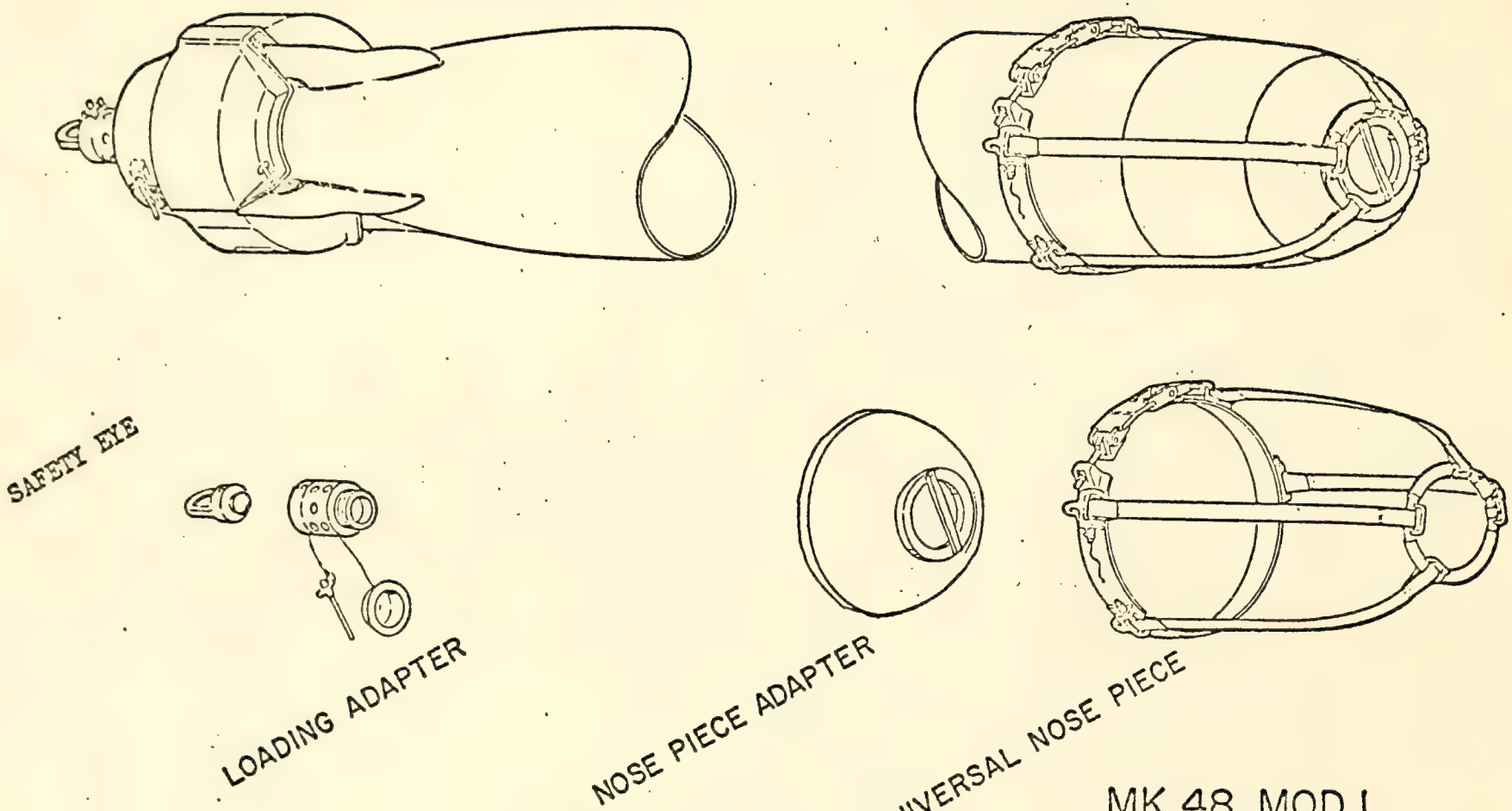

MK 48 MOD I

NOSE-FIRST INCLINED SHIPPING
30" HATCH APPLICABILITY

SSN 637 and 671 CLASS

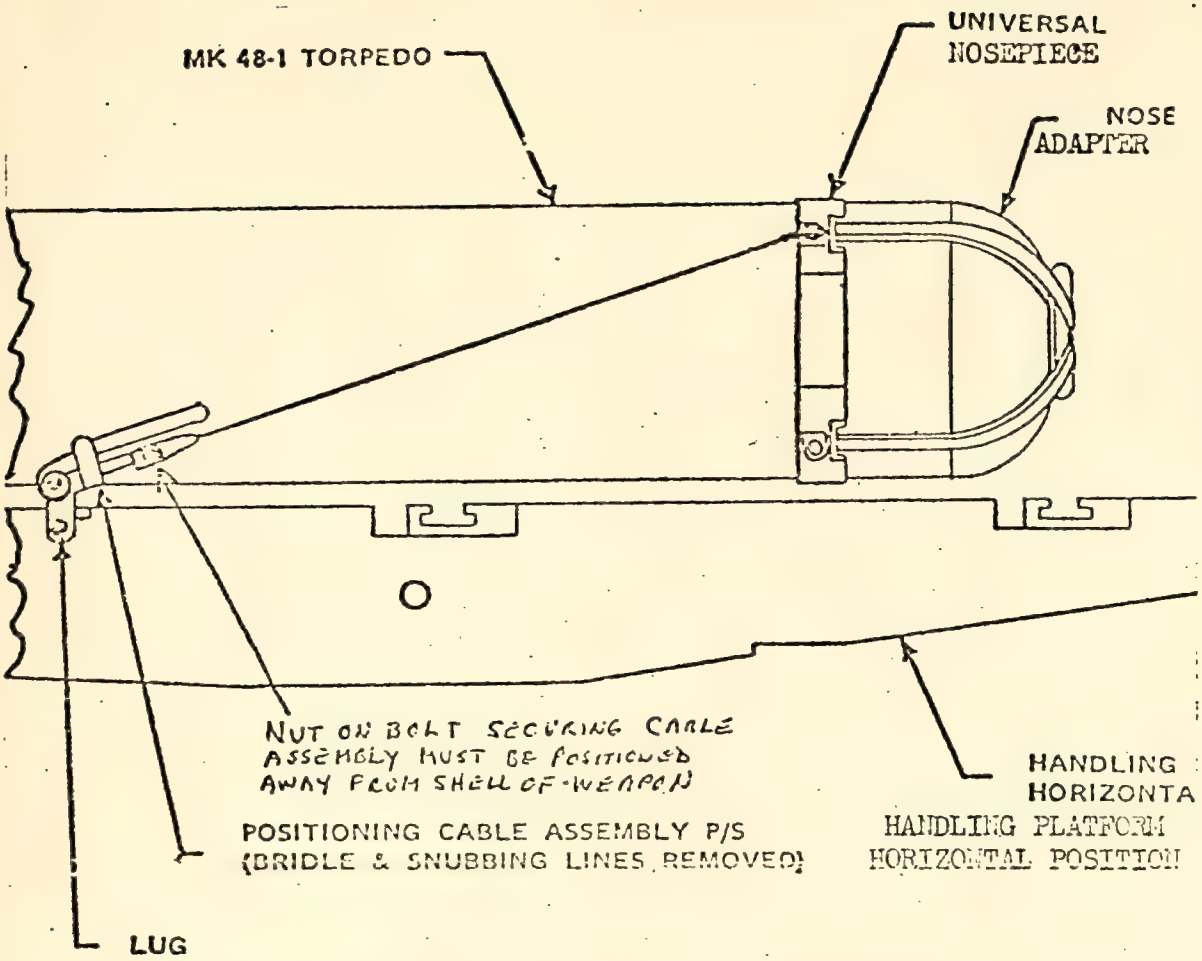

MK48 - 1 TORPEDO POSITIONED ON TOPSIDE DECK SKID

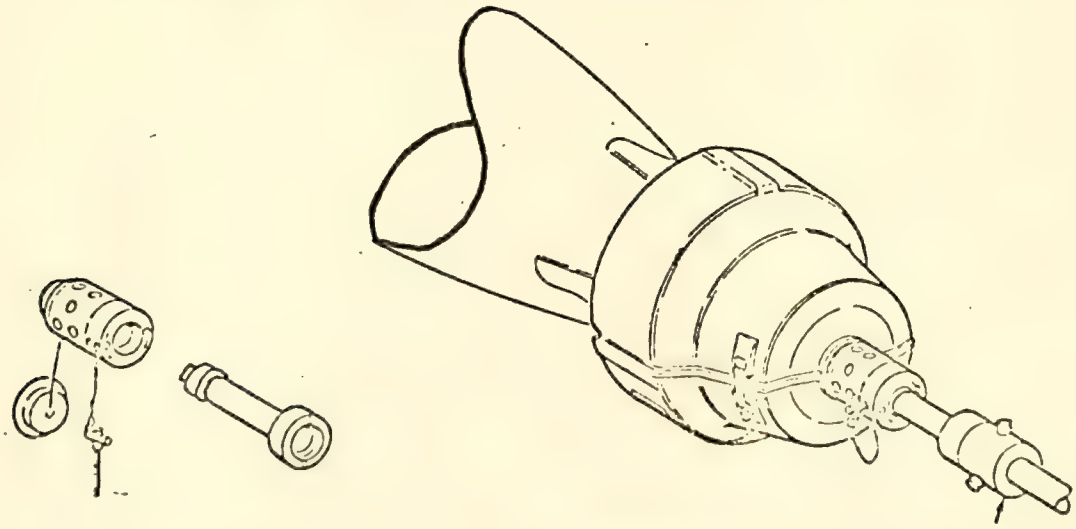

POWER LOADING ASSEMBLY

TUBE LOADING EQUIPMENT (SHIPBOARD)

POWER TUBE LOADING EQUIPMENT

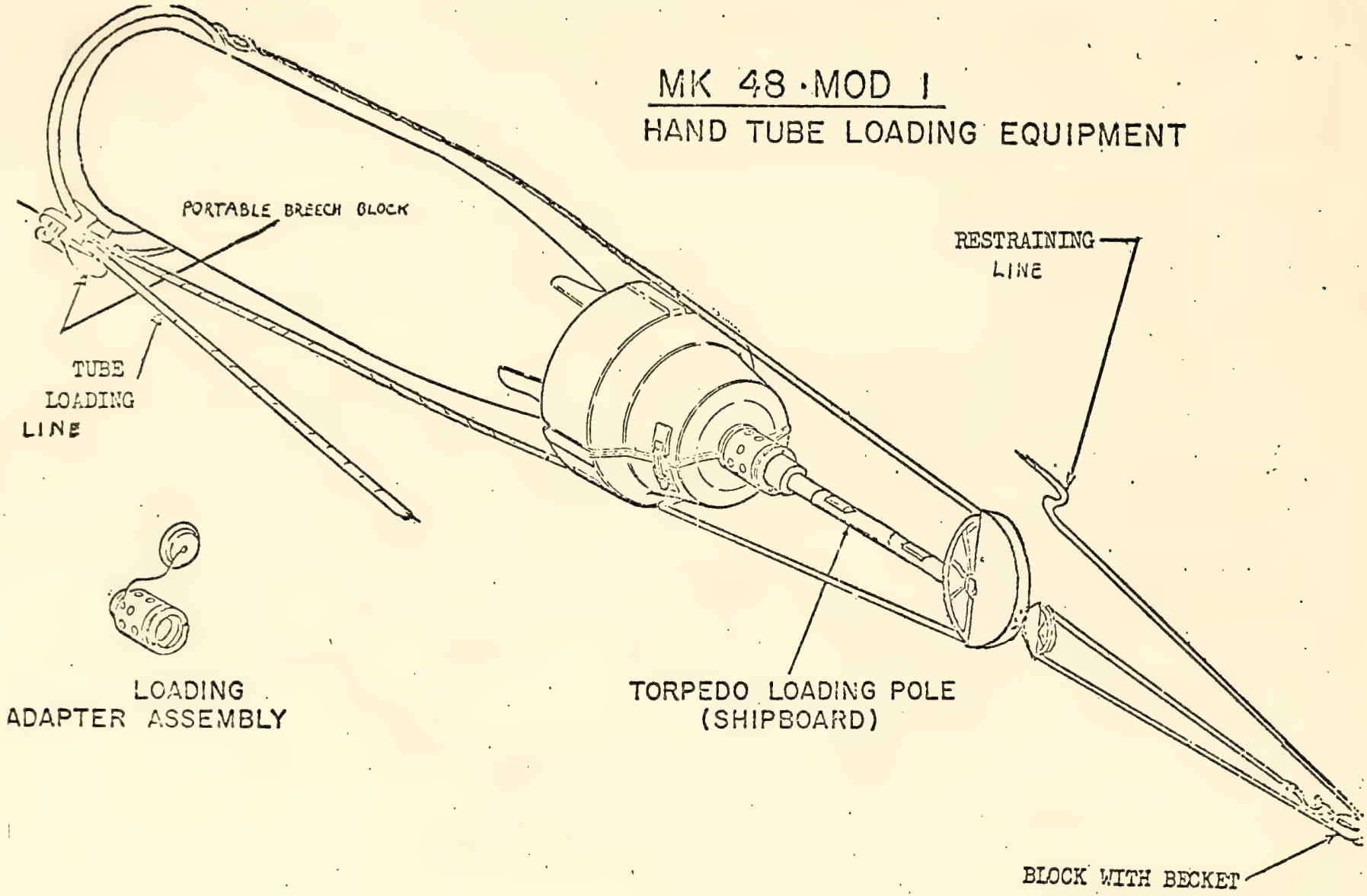
MK 48 · MOD 1
HAND TUBE LOADING EQUIPMENT
PORTABLE BREECH BLOCK
TUBE LOADING LINE
RESTRAINING LINE
LOADING ADAPTER ASSEMBLY
TORPEDO LOADING POLE (SHIPBOARD)
BLOCK WITH BECKET

APPENDIX VII PMO, Contractors' and Government Agencies' Relationships

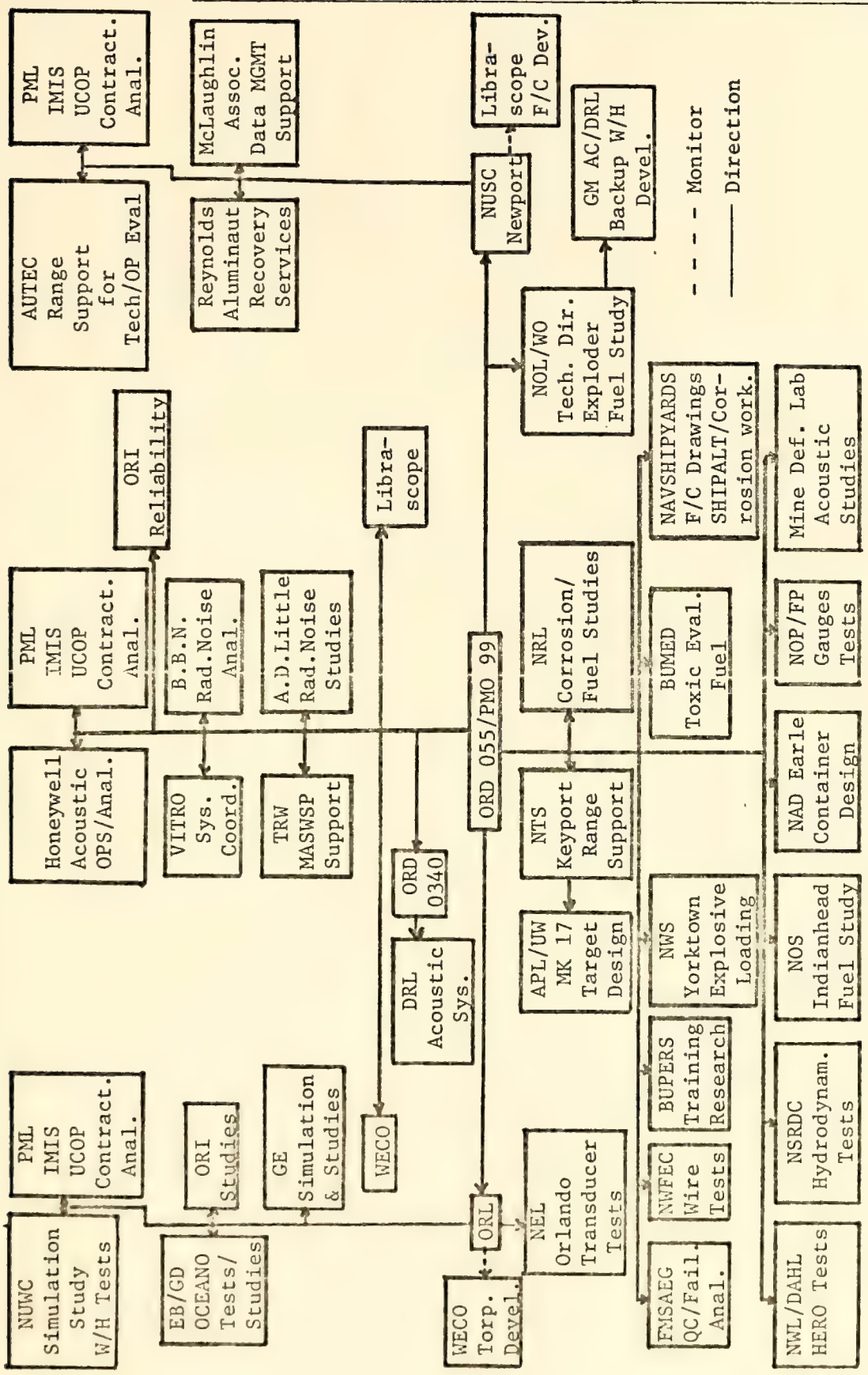

MK-48 Torpedo Task Direction Process

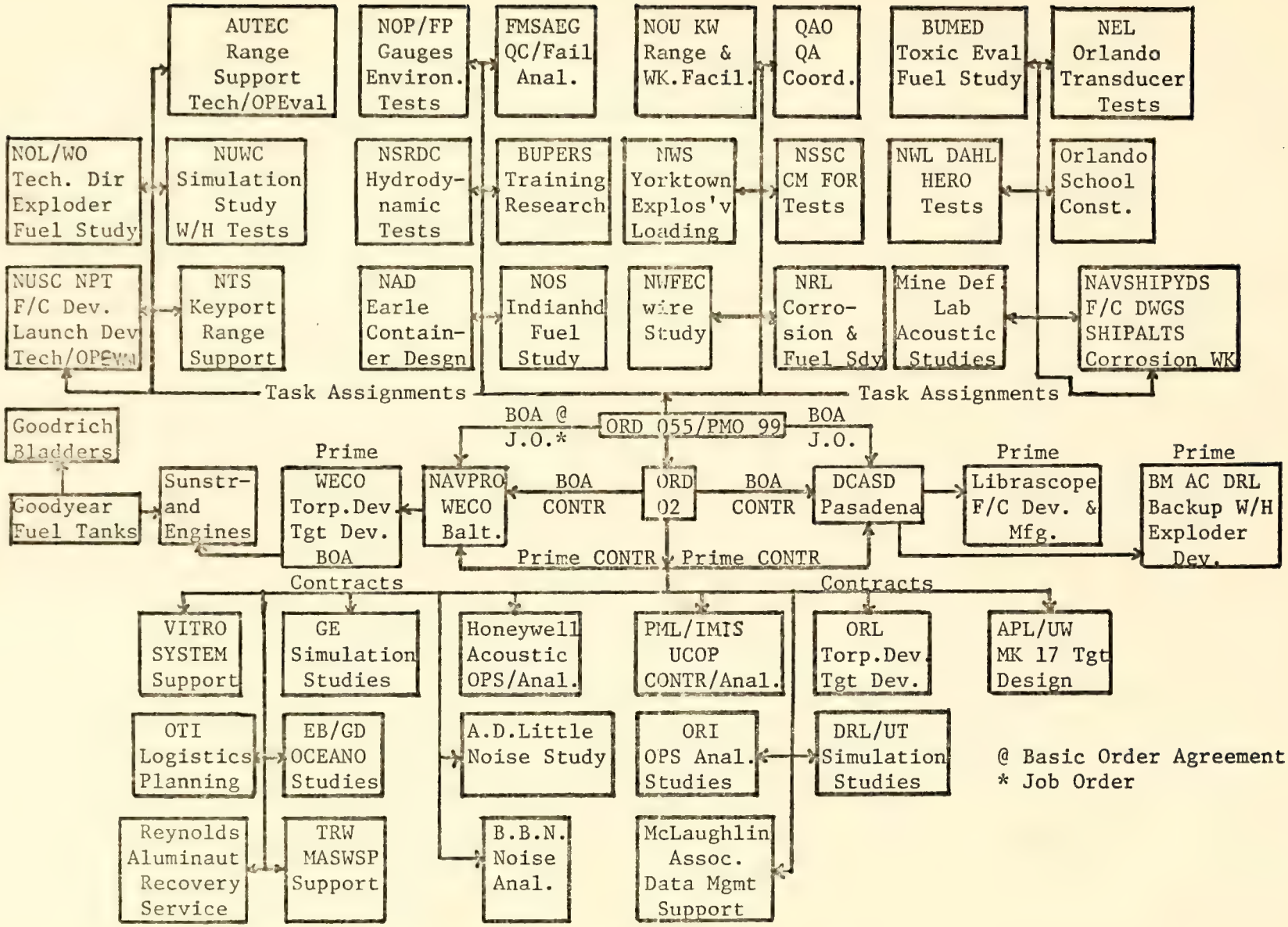

MK-48 Torpedo Task Assignment Process

APPENDIX VIII

REFERENCE MATERIAL

The material presented in this thesis is based upon recorded interviews with the personnel involved; a multitude of letters, memos, and papers extracted from the archives of the organizations involved; and the personal knowledge and opinions of the authors.

The tape recorded interviews are in the possession of the thesis Co-advisors. The authors recognize that there is a great deal of fertile ground yet to be plowed in the MK-48 program. And, the authors desire to make these recorded interviews available to interested researchers with the provision that all interviewees remain anonymous.

Those letters, memos, and papers that the authors were permitted to retain are in the process of being entered into the formal library system at the Naval Postgraduate School.

Finally, the authors have gained a great deal of personal knowledge regarding the MK-48 Program that is not necessarily expressed in this thesis. The authors are willing to share this knowledge and the aforementioned reference material with those interested, under the covenant that any resultant work be cleared through the Project Manager's Office prior to publication.

APPENDIX IX

TEACHING NOTES

It is anticipated that the case studies presented in this thesis will achieve several miles of teaching benefit in the years to come. Their use is not limited to any single academic subject. Accordingly, the authors have conducted "free-wheeling" discussions with the thesis Co-advisors regarding key points in each case. Topics included in these discussions are attitudes and personalities of the players, extenuating or aggravating circumstances, actual outcomes, and identification of subtle clues.

Additionally, the authors have responded to questions presented by the thesis Co-advisors regarding teaching techniques and value. These conversations, questions and responses have been recorded on tape and are in the possession of the thesis Co-advisors.

INITIAL DISTRIBUTION LIST

		No. Copies
1.	Defense Documentation Center Cameron Station Alexandria, Virginia 22314	2
2.	Library, Code 0212 Naval Postgraduate School Monterey, California 93940	2
3.	Department Chairman, Code 55 Department of Operations Research and Administrative Sciences Naval Postgraduate School Monterey, California 93940	2
4.	Asst. Professor S. M. Dean, Code 55De Department of Operations Research and Administrative Sciences Naval Postgraduate School Monterey, California 93940	2
5.	Asst. Professor W. C. Giauque, Code 55Gi Department of Operations Research and Administrative Sciences Naval Postgraduate School Monterey, California 93940	2
6.	LCDR R. F. Hurley, Jr., USN 2 Victoria Vale Monterey, California 93940	1
7.	CDR D. A. Newcomb, USN 5103 Fleming Drive Annandale, Virginia 22003	1
8.	CDR P. DeMayo, SC, USN, Code 55Dm Systems Acquisition Management Academic Associate Department of Operations Research and Administrative Sciences Naval Postgraduate School Monterey, California 93940	2
9.	NAVSEASYSCOM (Code 06HE) Washington, D.C. 20362 ATTN: Mr. N. A. Crone	4

10. Commander Submarine Force 2
U.S. Atlantic Fleet
Norfolk, Virginia 23511

11. Commander Submarine Force 2
U.S. Atlantic Fleet
Norfolk, Virginia 23511
ATTN: CDR. H. E. Tibbetts, USN

12. Commander Submarine Force 1
U.S. Atlantic Fleet
Norfolk, Virginia 23511
ATTN: CDR W. J. Smith, USN

13. Commanding Officer 2
Naval Underwater Systems Center
Newport, Rhode Island 02840

14. Systems Engineering Staff (SB11) 2
Systems Operations Group
Naval Underwater Systems Center
Newport, Rhode Island 02840
ATTN: Mr. G. H. Allen

15. Advanced Weapons Systems Engineering Department 1
Torpedo MK-48 MOD-1 Division
Naval Underwater Systems Center
Newport, Rhode Island 02840
ATTN: Mr. A. J. Ferreira

16. Naval Ordnance Systems Support Office Atlantic 1
Norfolk Naval Shipyard
Portsmouth, Virginia 23709
ATTN: Mr. D. Meals

17. Naval Ordnance Systems Support Office Atlantic 1
Norfolk Naval Shipyard
Portsmouth, Virginia 23709
ATTN: Mr. R. Bunn

10. Commander Submarine Force
U.S. Atlantic Fleet
Norfolk, Virginia 23511 2

11. Commander Submarine Force
U.S. Atlantic Fleet
Norfolk, Virginia 23511
ATTN: CDR. R. E. Tabberer, USN 2

12. Commander Submarine Force
U.S. Atlantic Fleet
Norfolk, Virginia 23511
ATTN: CDR W. J. Smith, USN 1

13. Commanding Officer
Naval Underwater Systems Center
Newport, Rhode Island 02840 2

14. Systems Engineering Staff (SES)
Systems Operations Group
Naval Underwater Systems Center
Newport, Rhode Island 02840
ATTN: Mr. O. R. Allen 2

15. Advanced Ranges Systems Engineering Department 1
Template NC-15 MOD-1 Division
Naval Underwater Systems Center
Newport, Rhode Island 02840
ATTN: Mr. A. J. Martella

16. Naval Ordnance Systems Support Office Atlantic 1
Norfolk Naval Shipyard
Portsmouth, Virginia 23709
ATTN: Mr. D. Mann

17. Naval Ordnance Systems Support Office Pacific 1
Pacific Naval Shipyard
Portsmouth, Virginia 23709
ATTN: Mr. D. Mann

Thesis 155444
H95714 Hurley
c.1
Weapons system introduction need not be a charade.

Thesis 155444
H95714 Hurley
c.1
Weapons system introduction need not be a charade.

thesH95714
Weapons system introduction need not be
3 2768 002 13285 4
DUDLEY KNOX LIBRARY